CMS Manual System	Department of Health & Human Services (DHHS)
Pub 100-04 Medicare Claims Processing	Centers for Medicare & Medicaid Services (CMS)
Transmittal 1560	**Date: JULY 18, 2008**
	Change Request 6080

Transmittal 1523, dated May 30, 2008 is being rescinded and replaced with Transmittal 1560, dated July 18, 2008. Due to the new legislation, we need to re-issue the attachments for CR 6080 (July Recurring IOCE CR). The statute continues the cost to charge payment methodology for Brachytherapy and Therapeutic Radiopharmaceuticals through January 1, 2010 and therefore the status indicators contained in the specs for these services need to reflect the appropriate payment methodology. There are no changes to the CR or the business rules, just the attachments. All other information remains the same.

SUBJECT: July 2008 Integrated Outpatient Code Editor (I/OCE) Specifications Version 9.2

I. SUMMARY OF CHANGES: This instruction informs the Fiscal Intermediaries (FIs), A/B MACs, and the Fiscal Intermediary Standard System (FISS) that the I/OCE was updated for July 1, 2008. The I/OCE routes all institutional outpatient claims (which includes non-OPPS hospital claims) through a single integrated OCE which eliminates the need to update, install, and maintain two separate OCE software packages on a quarterly basis. Claims with dates of service prior to July 1, 2007, should be routed through the non-integrated versions of the OCE software (OPPS and non-OPPS OCEs) that coincide with the versions in effect for the date of service on the claim. The integration did not change the logic that is applied to outpatient bill types that previously passed through the OPPS OCE software. It merely expanded the software usage to include non-OPPS hospitals. This Recurring Update Notification refers to Chapter 4, §40.1

New / Revised Material
Effective Date: July 1, 2008
Implementation Date: July 7, 2008

Disclaimer for manual changes only: The revision date and transmittal number apply only to red italicized material. Any other material was previously published and remains unchanged. However, if this revision contains a table of contents, you will receive the new/revised information only, and not the entire table of contents.

II. CHANGES IN MANUAL INSTRUCTIONS: (N/A if manual is not updated)
R=REVISED, N=NEW, D=DELETED-*Only One Per Row.*

R/N/D	Chapter / Section / Subsection / Title
N/A	

III. FUNDING:
SECTION A: For Fiscal Intermediaries and Carriers:
No additional funding will be provided by CMS; Contractor activities are to be carried out within their operating budgets.

SECTION B: For Medicare Administrative Contractors (MACs):

The Medicare Administrative Contractor is hereby advised that this constitutes technical direction as defined in your contract. CMS does not construe this as a change to the MAC Statement of Work. The contractor is not obligated to incur costs in excess of the amounts allotted in your contract unless and until specifically authorized by the Contracting Officer. If the contractor considers anything provided, as described above, to be outside the current scope of work, the contractor shall withhold performance on the part(s) in question and immediately notify the Contracting Officer, in writing or by e-mail, and request formal directions regarding continued performance requirements.

IV. ATTACHMENTS:

Recurring Update Notification

**Unless otherwise specified, the effective date is the date of service.*

Attachment – Recurring Update Notification

Pub. 100-04	Transmittal: 1560	Date: July 18, 2008	Change Request: 6080

Transmittal 1523, dated May 30, 2008 is being rescinded and replaced with Transmittal 1560, dated July 18, 2008. Due to the new legislation, we need to re-issue the attachments for CR 6080 (July Recurring IOCE CR). The statute continues the cost to charge payment methodology for Brachytherapy and Therapeutic Radiopharmaceuticals through January 1, 2010 and therefore the status indicators contained in the specs for these services need to reflect the appropriate payment methodology. There are no changes to the CR or the business rules, just the attachments. All other information remains the same

SUBJECT: July 2008 Integrated Outpatient Code Editor (I/OCE) Specifications Version 9.2

Effective Date: July 1, 2008

Implementation Date: July 7, 2008

I. GENERAL INFORMATION

A. Background: This instruction informs the Fiscal Intermediaries (FIs), A/B MACs, and the Fiscal Intermediary Standard System (FISS) that the I/OCE was updated for July 1, 2008. The I/OCE routes all institutional outpatient claims (which includes non-OPPS hospital claims) through a single integrated OCE which eliminates the need to update, install, and maintain two separate OCE software packages on a quarterly basis. Claims with dates of service prior to July 1, 2007, should be routed through the non-integrated versions of the OCE software (OPPS and non-OPPS OCEs) that coincide with the versions in effect for the date of service on the claim. **The integration did not change the logic that is applied to outpatient bill types that previously passed through the OPPS OCE software. It merely expanded the software usage to include non-OPPS hospitals.**

B. Policy: This notification provides the Integrated OCE instructions and specifications for the Integrated OCE that will be utilized under the OPPS and Non-OPPS for hospital outpatient departments, community mental health centers (CMHCs), and for all non-OPPS providers, and for limited services when provided in a home health agency (HHA) not under the Home Health Prospective Payment System or to a hospice patient for the treatment of a non-terminal illness. The I/OCE instructions are attached to this Change Request and will also be posted to http://www.cms.hhs.gov/OutpatientCodeEdit/.

II. BUSINESS REQUIREMENTS TABLE

Number	Requirement	Responsibility (place an "X" in each applicable column)									
		A/B MAC	DME MAC	FI	CARRIER	RHHI	Shared-System Maintainers				OTHER
							FISS	MCS	VMS	CWF	

Number	Requirement	Responsibility (place an "X" in each applicable column)									
		A/B MAC	DME MAC	FI	CARRIER	RHHI	Shared-System Maintainers				OTHER
							FISS	MCS	VMS	CWF	
6080.1	The Shared System Maintainer shall install the Integrated OCE (I/OCE) into their systems.	X		X			X				
6080.2	Contractors shall inform providers of the changes for the Integrated OCE detailed in this recurring notification.	X		X		X					

III. PROVIDER EDUCATION TABLE

Number	Requirement	Responsibility (place an "X" in each applicable column)									
		A/B MAC	DME MAC	FI	CARRIER	RHHI	Shared-System Maintainers				OTHER
							FISS	MCS	VMS	CWF	
6080.3	A provider education article related to this instruction will be available at http://www.cms.hhs.gov/MLNMattersArticles/ shortly after the CR is released. You will receive notification of the article release via the established "MLN Matters" listserv. Contractors shall post this article, or a direct link to this article, on their Web site and include information about it in a listserv message within one week of the availability of the provider education article. In addition, the provider education article shall be included in your next regularly scheduled bulletin. Contractors are free to supplement MLN Matters articles with localized information that would benefit their provider community in billing and administering the Medicare program correctly.	X		X		X					

IV. SUPPORTING INFORMATION

A. For any recommendations and supporting information associated with listed requirements, use the box below:

X-Ref Requirement Number	Recommendations or other supporting information:
5344	Notification of an Integrated Outpatient Code Editor (OCE) for the July 2007 Release

B. For all other recommendations and supporting information, use this space: N\A

V. CONTACTS

Pre-Implementation Contact(s):
Maria Durham at maria.durham@cms.hhs.gov or Diana Motsiopoulos at diana.motsiopoulos@cms.hhs.gov.

For Policy related questions contact Marjorie Baldo at marjorie.baldo@cms.hhs.gov

Post-Implementation Contact(s):
Regional Office(s) or the CMS Outpatient Code Editor Email at OCE_Integration@cms.hhs.gov

VI. FUNDING

A. *For Fiscal Intermediaries and Carriers*:
No additional funding will be provided by CMS; contractor activities are to be carried out within their operating budgets.

B. *For Medicare Administrative Contractors (MAC)*:
The Medicare Administrative Contractor (MAC) is hereby advised that this constitutes technical direction as defined in your contract. CMS does not construe this as changes to the MAC Statement of Work (SOW). The contractor is not obligated to incur costs in excess of the amounts specified in your contract unless and until specifically authorized by the contracting officer. If the contractor considers anything provided, as described above, to be outside the current scope of work, the contractor shall withhold performance on the part(s) in question and immediately notify the contracting officer, in writing or by e-mail, and request formal directions regarding continued performance requirements.

ATTACHMENTS (2)

Attachment A-I/OCE Specifications Version 9.2

Attachment B-Final Summary of Data Changes

Attachment A

Integrated Outpatient Code Editor (I/OCE) CMS Specifications V9.2(R2) - Effective 07/01/08

This attachment contains specifications issued for the July I/OCE Version 9.2(R2). All shaded material reflects changes incorporated into the April 2008 I/OCE.

Integrated OCE (IOCE)

CMS Specifications

V9. 2 (R2) - Effective 07/01/08

This 'integrated' OCE program processes claims for outpatient institutional providers including hospitals that are subject to the Outpatient Prospective Payment System (OPPS) as well as hospitals that are NOT (Non-OPPS). The Fiscal Intermediary/Medicare Administrative Contractor (FI/MAC) will identify the claim as 'OPPS' or 'Non-OPPS' by passing a flag to the OCE in the claim record, 1=OPPS, 2=Non-OPPS; a blank, zero, or any other value is defaulted to 1.

This version of the OCE processes claims consisting of multiple days of service. The OCE will perform three major functions:

Edit the data to identify errors and return a series of edit flags.
Assign an Ambulatory Payment Classification (APC) number for each service covered under OPPS, and return information to be used as input to an OPPS PRICER program.
Assign an Ambulatory Surgical Center (ASC) payment group for qualifying services on claims from certain Non-OPPS hospitals (bill type 83x) – in the PC program/interface only [v8.2 – v8.3 only].

Each claim will be represented by a collection of data, which will consist of all necessary demographic (header) data, plus all services provided (line items). It will be the user's responsibility to organize all applicable services into a single claim record, and pass them as a unit to the OCE. The OCE only functions on a single claim and does not have any cross claim capabilities. The OCE will accept up to 450 line items per claim. The OCE software is responsible for ordering line items by date of service.

The OCE not only identifies individual errors but also indicates what actions should be taken and the reasons why these actions are necessary. In order to accommodate this functionality, the OCE is structured to return lists of edit numbers. This structure facilitates the linkage between the actions being taken, the reasons for the actions and the information on the claim (e.g., a specific diagnosis) that caused the action.

In general, the OCE performs all functions that require specific reference to HCPCS codes, HCPCS modifiers and ICD-9-CM diagnosis codes. Since these coding systems are complex and annually updated, the centralization of the direct reference to these codes and modifiers in a single program will reduce effort and reduce the chance of inconsistent processing.

The span of time that a claim represents will be controlled by the *From* and *Through* dates that will be part of the input header information. If the claim spans more than one calendar day, the OCE will subdivide the claim into separate days for the purpose of determining discounting and multiple visits on the same calendar day.

Some edits are date driven. For example, Bilateral Procedure is considered an error if a pair of procedures is coded with the same service date, but not if the service dates are different.

Information is passed to the OCE by means of a control block of pointers. Table 1 contains the structure of the OCE control block. The shaded area separates input from return information. Multiple items are assumed to be in contiguous locations.

Pointer Name		UB-04 Form Locator	Number	Size (bytes)	Comment
Dxptr	ICD-9-CM diagnosis codes	70 a-c (Pt's rvdx) 67 (pdx) 67A-Q (sdx)	Up to 16	6	Diagnosis codes apply to whole claim and are not specific to a line item (left justified, blank filled). First listed diagnosis is considered 'patient's reason for visit dx', second diagnosis is considered 'principal dx'
Ndxptr	Count of the number of diagnoses pointed to by *Dxptr*		1	4	Binary fullword count
Sgptr	Line item entries	42, 44-47	Up to 450	Table 2	
Nsgptr	Count of the number of Line item entries pointed to by Sgptr		1	4	Binary fullword count
Flagptr	Line item action flag Flag set by FI/MAC and passed by OCE to Pricer		Up to 450	1	(See Table 7)
Ageptr	Numeric age in years		1	3	0-124
Sexptr	Numeric sex code	11	1	1	0, 1, 2 (unknown, male, female)
Dateptr	From and Through dates (yyyymmdd)	6	2	8	Used to determine multi-day claim
CCptr	Condition codes	18-28	Up to 7	2	Used to identify partial hospitalization and hospice claims
NCCptr	Count of the number of condition codes entered		1	4	Binary fullword count
Billptr	Type of bill	4 (Pos 2-4)	1	3	Used to identify CMHC and claims pending under OPPS. It is presumed that bill type has been edited for validity by the Standard System before the claim is sent to OCE
NPIProvptr	National provider identifier (NPI)	56	1	13	Pass on to Pricer
OSCARProvptr	OSCAR Medicare provider number	57	1	6	Pass on to Pricer
PstatPtr	Patient status	17	1	2	UB-92 values
OppsPtr	Opps/Non-OPPS flag		1	1	1=OPPS, 2=Non-OPPS (A blank, zero or any other value is defaulted to 1)
OccPtr	Occurrence codes	31-34	Up to 10	2	For FI/MAC use
NOccptr	Count of number of occurrence codes		1	4	Binary fullword count
Dxeditptr	Diagnosis edit return buffer		Up to 16	Table 3	Count specified in Ndxptr
Proceditptr	Procedure edit return buffer		Up to 450	Table 3	Count specified in Nsgptr
Mdeditptr	Modifier edit return buffer		Up to 450	Table 3	Count specified in Nsgptr
Dteditptr	Date edit return buffer		Up to 450	Table 3	Count specified in Nsgptr
Rceditptr	Revenue code edit return buffer		Up to 450	Table 3	Count specified in Nsgptr
APCptr	APC/ASC return buffer		Up to 450	Table 7	Count specified in Nsgptr
Claimptr	Claim return buffer		1	Table 5	
Wkptr	Work area pointer		1	512K	Working storage allocated in user interface
Wklenptr	Actual length of the work area pointed to by Wkptr		1	4	Binary fullword

Table 1: OCE Control block

The input for each line item contains the information described in Table 2.

Field	UB-04 Form Locator	Number	Size (bytes)	Comments
HCPCS procedure code	44	1	5	May be blank
HCPCS modifier	44	5 x 2	10	
Service date	45	1	8	Required for all lines
Revenue code	42	1	4	
Service units	46	1	7	A blank or zero value is defaulted to 1
Charge	47	1	10	Used by PRICER to determine outlier payments

Table 2: Line item input information

There are currently78 different edits in the OCE. The occurrence of an edit can result in one of six different dispositions.

Claim Rejection	There are one or more edits present that cause the whole claim to be rejected. A claim rejection means that the provider can correct and resubmit the claim but cannot appeal the claim rejection.
Claim Denial	There are one or more edits present that cause the whole claim to be denied. A claim denial means that the provider can not resubmit the claim but can appeal the claim denial.
Claim Return to Provider (RTP)	There are one or more edits present that cause the whole claim to be returned to the provider. A claim returned to the provider means that the provider can resubmit the claim once the problems are corrected.
Claim Suspension	There are one or more edits present that cause the whole claim to be suspended. A claim suspension means that the claim is not returned to the provider, but is not processed for payment until the FI/MAC makes a determination or obtains further information.
Line Item Rejection	There are one or more edits present that cause one or more individual line items to be rejected. A line item rejection means that the claim can be processed for payment with some line items rejected for payment. The line item can be corrected and resubmitted but cannot be appealed.
Line Item Denials	There are one or more edits present that cause one or more individual line items to be denied. A line item denial means that the claim can be processed for payment with some line items denied for payment. The line item cannot be resubmitted but can be appealed.

In the initial release of the OCE, many of the edits had a disposition of RTP in order to give providers time to adapt to OPPS. In subsequent releases of the OCE, the disposition of some edits may be changed to other more automatic dispositions such as a line item denial. A single claim can have one or more edits in all six dispositions. Six 0/1 dispositions are contained in the claim return buffer that indicate the presence or absence of edits in each of the six dispositions. In addition, there are six lists of reasons in the claim return buffer that contain the edit numbers that are associated with each disposition. For example, if there were three edits that caused the claim to have a disposition of return to provider, the edit numbers of the three edits would be contained in the claim return to provider reason list. There is more space allocated in the reason lists than is necessary for the current edits in order to allow for future expansion of the number of edits.

In addition to the six individual dispositions, there is also an overall claim disposition, which summarizes the status of the claim.

The following special processing conditions currently apply only to OPPS claims:

1) Partial hospitalizations are paid on a per diem basis. There is no HCPCS code that specifies a partial hospitalization related service. Partial hospitalizations are identified by means of condition codes, bill types and HCPCS codes specifying the individual services that constitute a partial hospitalization (See Appendix C-a). Thus, there are no input line items that directly correspond to the partial hospitalization service. In order to assign the partial hospitalization APC to one of the line items, the payment APC for one of the line items that represent one of the services that comprise partial hospitalization is assigned the partial hospitalization APC. All other partial hospital services on the same day are packaged – SI changed from Q to N, and a special packaging flag is assigned. Lines that are denied or rejected are ignored in PHP processing.

2) Reimbursement for a day of outpatient mental health services in a non-PH program is capped at the amount of the partial hospital per diem. On a non-PHP claim, the OCE totals the payments for all the designated MH services with the same date of service; if the sum of the payments for the individual MH services exceeds the partial hospital per-diem, the OCE assigns a special "Mental Health Service" composite payment APC to one of the line items that represent MH services. All other MH services for that day are packaged – SI changed from Q to N, and a special packaging flag is assigned (See appendix C-b). The payment rate for the Mental Health Services composite APC is the same as that for the partial hospitalization APC. Lines that are denied or rejected are ignored in the Daily Mental Health logic.

3) For outpatients who undergo inpatient-only procedures on an emergency basis and who expire before they can be admitted to the hospital, a specified APC payment is made to the provider as reimbursement for all services on that day. The presence of modifier CA on the inpatient-only procedure line assigns the specified payment APC and associated status and payment indicators to the line. The packaging flag is turned on for all other lines on that day. Payment is only allowed for one procedure with modifier CA. If multiple inpatient-only procedures are submitted with the modifier –CA, the claim is returned to the provider. If modifier CA is submitted with an inpatient-only procedure for a patient who did not expire (patient status code is not 20), the claim is returned to the provider.

4) Inpatient-only procedures that are on the separate-procedure list are bypassed when performed incidental to a surgical procedure with Status Indicator T. The line(s) with the inpatient-separate procedure is rejected and the claim is processed according to usual OPPS rules.

5) When multiple occurrences of any APC that represents drug administration are assigned in a single day, modifier-59 is required on the code(s) in order to permit payment for multiple units of that APC, up to a specified maximum; additional units above the maximum are packaged. If modifier –59 is not used, only one occurrence of any drug administration APC is allowed and any additional units are packaged (see Appendix I). (v6.0 – v7.3 only)

6) The use of a device, or multiple devices, is necessary to the performance of certain outpatient procedures. If any of these procedure~~s~~ is submitted without a code for the required device(s), the claim is returned to the

provider. Discontinued procedures (indicated by the presence of modifier 52, 73 or 74 on the line) are not returned for a missing device code.
Conversely, some devices are allowed only with certain procedures, whether or not the specific device is required. If any of these devices is submitted without a code for an allowed procedure, the claim is returned to the provider.

7) Observations may be paid separately if specific criteria are met; otherwise, the observation is packaged into other payable services on the same day. (See Appendix H-a) [v3.1- v8.3].
Observation is a packaged service; may be used to assign Extended Assessment and Management composite APCs, effective v9.0 (See appendix K).

8) Direct admission from a physician's office to observation may be used in the assignment of an extended assessment and management composite, packaged into T, V or critical care service procedure if present; otherwise, the direct admission is processed as a medical visit (see Appendix H-b).

9) In some circumstances, in order for Medicare to correctly allocate payment for blood processing and storage, providers are required to submit two lines with different revenue codes for the same service when blood products are billed. One line is required with revenue code 39X and an identical line (same HCPCS, modifier and units) with revenue code 38X (see Appendix J).

10) Certain wound care services may be paid an APC rate or from the Physician Fee Schedule, depending on the circumstances under which the service was provided. The OCE will change the status indicator and remove the APC assignment when these codes are submitted with therapy revenue codes or therapy modifiers.

11) Providers must append modifier 'FB' to procedures that represent implantation of replacement devices that are obtained at no cost to the provider. Modifier 'FC' is appended if the replacement device is obtained at reduced cost. If there is an offset payment amount for the procedure, the OCE will reduce the APC rate by the full offset amount (for FB), or by 50% of the offset amount (for FC) before determining the highest rate for multiple or terminated procedure discounting. If the modifier is used inappropriately (appended to procedure with SI other than S, T, X or V), the claim is returned to the provider. If both the FB and FC modifiers are appended to the same line, the FB modifier will take precedence and the full offset reduction will be applied.

12) Certain special HCPCS codes are always packaged when they appear with other specified services on the same day; however, they may be assigned to an APC and paid separately if there is none of the other specified service on the same day. Some codes are packaged in the presence of any code with status indicator of S, T, V or X (STVX-packaged); other codes are packaged only in the presence of codes with status indicator T (T-packaged). The OCE will change the SI from Q to N for packaging, or to the payable SI and APC specified for the code. If there are multiple STVX and/or T packaged HCPCS codes on a specific date and no ~~other~~ service with which the codes would be packaged on the same date, the code assigned to the APC with the highest payment rate will be paid. All other codes are packaged.

13) Submission of the trauma response critical care code requires that the trauma revenue code (068x) and the critical care E&M code (99291) also be present on the claim for the same date of service. Otherwise, the trauma response critical care code will be rejected.

14) Certain codes may be grouped together for reimbursement as a "composite" APC when they occur together on the same claim with the same date of service. When the composite criteria for a group are met, the primary code is assigned the composite APC and status indicator for payment; non-primary codes, and additional primary codes from the same composite group, are assigned status indicator N and packaged into the composite APC. Special payment adjustment flags identify each composite and all the packaged codes on the claim that are related to that composite. Multiple composites, from different composite groups, may be assigned to a claim for the same date. Terminated codes (modifier 52 or 73) are not included in the composite criteria. If the composite criteria are not met, each code is assigned an individual SI/APC for standard OPPS processing (see appendix K). Some composites may also have additional assignment criteria.

Lines that are denied or rejected are ignored in the composite criteria.

15) Certain nuclear medicine procedures are performed with specific radiopharmaceuticals. If any specified nuclear medicine procedure is submitted without a code for one of the specified radiopharmaceuticals on the same claim, the claim is returned to the provider. Nuclear medicine procedures that are terminated (indicated by modifier 52, 73 or 74) are not returned for a missing radiopharmaceutical.

The following special processing conditions apply Only to Non-OPPS HOPD claims:

1) Bill type of 83x is consistent with the presence of an ASC procedure on the bill and a calculated ASC payment. The Integrated OCE will assign bill type flags to Non-OPPS HOPD claims (opps flag =2) indicating that the bill type should be 83x when there is an ASC procedure code present; and, should not be 83x when there is no ASC procedure present.

Some processing conditions apply to OPPS HOPD and to some Non-OPPS institutional claims:

Antigens, Vaccine Administration, Splints, and Casts

Vaccine administration, antigens, splints, and casts are paid under OPPS for hospitals. In certain situations, these services when provided by HHA's not under the Home Health PPS, and to hospice patients for the treatment of a non-terminal illness, are also paid under OPPS.
(See appendix N for the specific list of HCPCS codes for reporting antigens, vaccine administration, splints and casts).

Correct Coding Initiative (CCI) Edits

The Integrated OCE generates CCI edits for OPPS hospitals. All NCCI edits are incorporated into the IOCE with the exception of anesthesiology, E&M and mental health code pairs. Modifiers and coding pairs in the OCE may differ from those in the NCCI because of differences between facility and professional services.

Effective January 1, 2006, these CCI edits also apply to ALL services billed, under bill types 22X, 23X, 34X, 74X, and 75X, by the following providers: Skilled Nursing Facilities (SNF's), Outpatient Physical Therapy and Speech-Language Pathology Providers (OPT's), CORF's, and Home Health Agencies (HHA's).

The CCI edits are applied to services submitted on a single claim, and on lines with the same date of service. CCI edits address two major types of coding situations. One type, referred to as the comprehensive/component edits, are those edits to code combinations where one of the codes is a component of the more comprehensive code. In this instance only the comprehensive code is paid. The other type, referred to as the mutually exclusive edits, are those edits applied to code combinations where one of the codes is considered to be either impossible or improbable to be performed with the other code. Other unacceptable code combinations are also included. The edit is set to pay the lesser-priced service.

Version 14.1 of CCI edits is included in the July, 2008 IOCE.

NOTE: The CCI edits in the IOCE are always one quarter behind the Carrier CCI edits.

See Appendix Fa and Fb "OCE Edits Applied by Bill Type" for bill types that the IOCE will subject to these and other OCE edits.

All institutional outpatient claims, regardless of facility type, will go through the Integrated Outpatient Code Editor (IOCE)*; however, not all edits are performed for all sites of service or types of claim. Appendix F (a) contains OCE edits that apply for each bill type under OPPS processing; appendix F (b) contains OCE edits that apply to claims from hospitals not subject to OPPS.

*__Note__: Effective for dates of service on or after 1/1/08 (v9.0), claims for 83x bill type will not go through the Integrated OCE.

The OPPS PRICER would compute the standard APC payment for a line item as the product of the payment amount corresponding to the assigned payment APC, the discounting factor and the number of units for all line items for which the following is true:

Criteria for applying standard APC payment calculations

APC value is not 00000
Payment indictor has a value of 1 or 5
Packaging flag has a value of zero or 3
Line item denial or rejection flag is zero or the line item action flag is 1
Line item action flag is not 2, 3 or 4
Payment adjustment flag is zero or 1
Payment method flag is zero

If payment adjustments are applicable to a line item (payment adjustment flag is not 0 or 1) then nonstandard calculations are necessary to compute payment for a line item (See Appendix G). The line item action flag is passed as input to the OCE as a means of allowing the FI/MAC to override a line item denial or rejection (used by FI/MAC to override OCE and have PRICER compute payment ignoring the line item rejection or denial) or allowing the FI/MAC to indicate that the line item should be denied or rejected even if there are no OCE edits present. The action flag is also used for handling external line item adjustments. For some sites of service (e.g., hospice) only some services are paid under OPPS.

The line item action flag also impacts the computation of the discounting factor in Appendix D. The Payment Method flag specifies for a particular site of service which of these services are paid under OPPS (See Appendix E). OPPS payment for the claim is computed as the sum of the payments for each line item with the appropriate conversion factor, wage rate adjustment, outlier adjustment, etc. applied. Appendix L summarizes the process of filling in the APC return buffer.

If a claim spans more than one day, the OCE subdivides the claim into separate days for the purpose of determining discounting and multiple visits on the same day. Multiple day claims are determined based on calendar day. The OCE deals with all multiple day claims issues by means of the return information. The Pricer does not need to be aware of the issues associated with multiple day claims. The Pricer simply applies the payment computation as described above and the result is the total OPPS payment for the claim regardless of whether the claim was for a single day or multiple days. If a multiple day claim has a subset of the days with a claim denial, RTP or suspend, the whole claim is denied, RTP or suspended.

General Programming Notes:

In composite processing, prime/non-prime lines that are denied or rejected (CCI or other edits) will not be included in the composite criteria.

Edits that use status indicator (SI) in their criteria will use the final SI, after any special (SI = Q) processing that could change the SI. (Exception: edits that are stipulated in the overview to be performed before the special processing).

For codes where the default SI is a 'Q', if special logic to change the SI is not performed because of the bill type or because the line is denied or rejected, the default SI will be carried through to the end of processing and will be returned as the final SI.
If the SI or APC of a code is changed during claims processing, the newly assigned SI or APC is used in computing the discount formula.

For the purpose of determining the version of the OCE to be used, the *From* date on the header information is used.

The edit return buffers consist of a list of the edit numbers that occurred for each diagnosis, procedure, modifier, date or revenue code. For example, if a 75-year-old male had a diagnosis related to pregnancy it would create a conflict between the diagnosis and age and sex. Therefore, the diagnosis edit return buffer for the pregnancy diagnosis would contain the edit numbers 2 and 3. There is more space allocated in the edit return buffers than is necessary for the current edits in order to allow future expansion of the number of edits. The edit return buffers are described in Table 3.

Name	Bytes	Number	Values	Description	Comments
Diagnosis edit return buffer	3	8	0,1-5	Three-digit code specifying the edits that applied to the diagnosis.	There is one 8x3 buffer for each of up to 16 diagnoses.
Procedure edit return buffer	3	30	0,6,8-9,11-21, 28,37-40, 42-45,47, 49-50,52-64, 66 -74, 76, 77, 78	Three-digit code specifying the edits that applied to the procedure.	There is one 30x3 buffer for each of up to 450 line items.
Modifier edit return buffer	3	4	0,22,75	Three-digit code specifying the edits that applied to the modifier.	There is one 4x3 buffer for each of the five modifiers for each of up to 450 line items.
Date edit return buffer	3	4	0,23	Three-digit code specifying the edits that applied to line item dates.	There is one 4x3 buffer for each of up to 450 line items.
Revenue center edit return buffer	3	5	0, 9[a] 41,48, 50[b], 65	Three-digit code specifying the edits that applied to revenue centers.	There is one 5x3 buffer for each of up to 450 line items

Table 3: Edit Return Buffers

[a]Revenue codes 099x with SI of E when submitted without a HCPCS code (OPPS only)
[b]Revenue code 0637 with SI of E when submitted without a HCPCS code (OPPS & Non-OPPS)

Each of the return buffers is positionally representative of the source that it contains information for, in the order in which that source was passed to the OCE. For example, the seventh diagnosis return buffer contains information about the seventh diagnosis; the fourth modifier edit buffer contains information about the modifiers in the fourth line item.

There are currently 78 different edits in the OCE, ten of which are inactive for the current version of the program. Each edit is assigned a number. A description of the edits is contained in Table 4.

Edit #	Description	Non-OPPS Hospitals	Disposition
1	Invalid diagnosis code	Y	RTP
2	Diagnosis and age conflict	Y	RTP
3	Diagnosis and sex conflict	Y	RTP
4[4]	Medicare secondary payor alert **(v1.0-v1.1)**		Suspend
5[4]	E-diagnosis code cannot be used as principal diagnosis	Y	RTP
6	Invalid procedure code	Y	RTP
7	Procedure and age conflict (Not activated)		RTP
8	Procedure and sex conflict	Y	RTP
9	Non-covered for reasons other than statute	Y	Line item denial
10	Service submitted for denial (condition code 21)	Y	Claim denial
11	Service submitted for FI/MAC review (condition code 20)	Y	Suspend
12	Questionable covered service	Y	Suspend
13	Separate payment for services is not provided by Medicare **(v1.0 – v6.3)**		Line item rejection
14	Code indicates a site of service not included in OPPS **(v1.0 – v6.3)**		Claim RTP
15	Service unit out of range for procedure [1]	Y	RTP
16	Multiple bilateral procedures without modifier 50 (see Appendix A) **(v1.0 – v6.2)**		RTP
17	Inappropriate specification of bilateral procedure (see Appendix A)	Y	RTP
18	Inpatient procedure [2]		Line item denial
19	Mutually exclusive procedure that is not allowed by NCCI even if appropriate modifier is present		Line item rejection
20	Code2 of a code pair that is not allowed by NCCI even if appropriate modifier is present		Line item rejection
21	Medical visit on same day as a type "T" or "S" procedure without modifier 25 (see Appendix B)		Line item rejection
22	Invalid modifier	Y	RTP
23	Invalid date	Y	RTP
24	Date out of OCE range	Y	Suspend
25	Invalid age	Y	RTP
26	Invalid sex	Y	RTP
27	Only incidental services reported [3]		Claim rejection
28	Code not recognized by Medicare; alternate code for same service may be available	Y	Line item rejection
	(See Appendix C for logic for edits 29-36, and 63-64)		
29	Partial hospitalization service for non-mental health diagnosis		RTP
30	Insufficient services on day of partial hospitalization		Suspend
31	Partial hospitalization on same day as ECT or type T procedure (v1.0 – v6.3)		Suspend
32	Partial hospitalization claim spans 3 or less days with insufficient services on a least one of the days		Suspend
33	Partial hospitalization claim spans more than 3 days with insufficient number of days having partial hospitalization services		Suspend
34	Partial hospitalization claim spans more than 3 days with insufficient number of days meeting partial hospitalization criteria		Suspend
35	Only Mental Health education and training services provided		RTP
36	Extensive mental health services provided on day of ECT or type T procedure (v1.0 – v6.3)		Suspend
37	Terminated bilateral procedure or terminated procedure with units greater than one		RTP
38	Inconsistency between implanted device or administered substance and implantation or associated procedure		RTP
39	Mutually exclusive procedure that would be allowed by NCCI if appropriate modifier were present		Line item rejection
40	Code2 of a code pair that would be allowed by NCCI if appropriate modifier were present		Line item rejection

Table 4: Description of edits/claim reasons (Part 1 of 2)

[1] For edit 15, units for *all line items with the same HCPCS on the same day* are added together for the purpose of applying the edit. If the total units exceeds the code's limits, the procedure edit return buffer is set for all line items that have the HCPCS code. If modifier 91 is present on a line item and the HCPCS is on a list of codes that are exempt, the unit edits are not applied.

[2] Edit 18 causes all other line items on the same day to be line item denied with Edit 49 (see APC/ASC return buffer "Line item denial or reject flag"). No other edits are performed on any lines with Edit 18 or 49.

[3] If Edit 27 is triggered, no other edits are performed on the claim.

[4] Not applicable for patient's reason for visit diagnosis

Edit	Description	Non-OPPS Hospitals	Disposition
41	Invalid revenue code	**Y**	RTP
42	Multiple medical visits on same day with same revenue code without condition code G0 (see Appendix B)		RTP
43	Transfusion or blood product exchange without specification of blood product		RTP
44	Observation revenue code on line item with non-observation HCPCS code		RTP
45	Inpatient separate procedures not paid		Line item rejection
46	Partial hospitalization condition code 41 not approved for type of bill	Y*	RTP
47	Service is not separately payable		Line item rejection
48	Revenue center requires HCPCS		RTP
49	Service on same day as inpatient procedure		Line item denial
50	Non-covered based on statutory exclusion	Y	RTP
51	Multiple observations overlap in time (**Not activated**)		RTP
52	Observation does not meet minimum hours, qualifying diagnoses, and/or 'T' procedure conditions **(V3.0-V6.3)**		RTP
53	Codes G0378 and G0379 only allowed with bill type 13x or 85x	Y*	Line item rejection
54	Multiple codes for the same service	Y	RTP
55	Non-reportable for site of service		RTP
56	E/M-condition not met and line item date for obs code G0244 is not 12/31 or 1/1 **(Active V4.0 – V6.3)**		RTP
57	Composite E/M condition not met for observation and line item date for code G0378 is 1/1		Suspend
58	G0379 only allowed with G0378		RTP
59	Clinical trial requires diagnosis code V707 as other than primary diagnosis		RTP
60	Use of modifier CA with more than one procedure not allowed		RTP
61	Service can only be billed to the DMERC	Y	RTP
62	Code not recognized by **OPPS**; alternate code for same service may be available		RTP
63	This OT code only billed on partial hospitalization claims (See appendix C)		RTP
64	AT service not payable outside the partial hospitalization program (See appendix C)		Line item rejection
65	Revenue code not recognized by Medicare	Y	Line item rejection
66	Code requires manual pricing		Suspend
67	Service provided prior to FDA approval	Y	Line item rejection
68	Service provided prior to date of National Coverage Determination (NCD) approval	Y	Line item rejection
69	Service provided outside approval period	Y	Line item rejection
70	CA modifier requires patient status code 20		RTP
71	Claim lacks required device code		RTP
72	Service not billable to the Fiscal Intermediary/Medicare Administrative Contractor	Y	RTP
73	Incorrect billing of blood and blood products		RTP
74	Units greater than one for bilateral procedure billed with modifier 50		RTP
75	Incorrect billing of modifier FB or FC		RTP
76	Trauma response critical care code without revenue code 068x and CPT 99291		Line item rejection
77	Claim lacks allowed procedure code		RTP
78	Claim lacks required radiopharmaceutical		RTP

Table 4: Description of edits/claim reasons (Part 2 of 2)

* Non-OPPS hospital bill types allowed for edit condition
Y = edits apply to Non-OPPS hospital claims

The claim return buffer described in Table 5 summarizes the edits that occurred on the claim.

	Bytes	Number	Values	Description
Claim processed flag	1	1	0-3, 9	0 - Claim processed. 1 - Claim could not be processed (edits 23, 24, 46[a], TOB 83x or other invalid bill type). 2 - Claim could not be processed (claim has no line items). 3 - Claim could not be processed (edit 10 - condition code 21 is present). 9 - Fatal error; OCE can not run - the environment can not be set up as needed; exit immediately.
Num of line items	3	1	nnn	Input value from Nsgptr, or 450, whichever is less.
National provider identifier (NPI)	13	1	aaaaaaaaaaaa	Transferred from input, for Pricer.
OSCAR Medicare provider number	6	1	aaaaaa	Transferred from input, for Pricer.
Overall claim disposition	1	1	0-5	0 - No edits present on claim. 1 - Only edits present are for line item denial or rejection. 2 - Multiple-day claim with one or more days denied or rejected. 3 - Claim denied, rejected, suspended or returned to provider, or single day claim w all line items denied or rejected, w only post payment edits. 4 - Claim denied, rejected, suspended or returned to provider, or single day claim w all line items denied or rejected, w only pre-payment edits. 5 - Claim denied, rejected, suspended or returned to provider, or single day claim w all line items denied or rejected, w both post-payment and pre-payment edits.
Claim rejection disposition	1	1	0-2	0 - Claim not rejected. 1 - There are one or more edits present that cause the claim to be rejected. 2 - There are one or more edits present that cause one or more days of a multiple-day claim to be rejected.
Claim denial disposition	1	1	0-2	0 - Claim not denied. 1 - There are one or more edits present that cause the claim to be denied. 2 - There are one or more edits present that cause one or more days of a multiple-day claim to be denied, or single day claim with all lines denied (edit 18 only).
Claim returned to provider disposition	1	1	0-1	0 - Claim not returned to provider. 1 - There are one or more edits present that cause the claim to be returned to provider.
Claim suspension disposition	1	1	0-1	0 - Claim not suspended. 1 - There are one or more edits present that cause the claim to be suspended.
Line item rejection disposition	1	1	0-1	0 - There are no line item rejections. 1 - There are one or more edits present that cause one or more line items to be rejected.
Line item denial disposition	1	1	0-1	0 - There are no line item denials. 1 - There are one or more edits present that cause one or more line items to be denied.
Claim rejection reasons	3	4	27	Three-digit code specifying edits (See Table 6) that caused the claim to be rejected. There is currently one edit that causes a claim to be rejected.
Claim denial reasons	3	8	10,	Three-digit code specifying edits (see Table 6) that caused the claim to be denied. There is currently one active edit that causes a claim to be denied.
Claim returned to provider reasons	3	30	1-3, 5-6, 8, 14-17, 22-23, 25-26, 29, 35, 37-38, 41-44, 46, 48, 50, 52, 54, 55,56, 58-63, 70-75, 77, 78	Three-digit code specifying edits (see Table 6) that caused the claim to be returned to provider. There are 43 edits that could cause a claim to be returned to provider.
Claim suspension reasons	3	16	4, 11, 12, 24, 30-34, 36, 57, 66	Three-digit code specifying the edits that caused the claim to be suspended (see Table 6). There are 12 edits that could cause a claim to be suspended.
Line item rejection reasons	3	12	13, 19, 20, 21, 28, 39, 40, 45, 47, ~~50~~, 53, 64, 65, 67-69, 76	Three-digit code specifying the edits that caused the line item to be rejected (See Table 6). There are 16 edits that could cause a line item to be rejected.
Line item denied reasons	3	6	9, 18, 49	Three-digit code specifying the edits that caused the line item to be denied (see Table 6). There are currently 3 active edits that cause a line item denial.
APC/ASC return buffer flag	1	1	0-1	0 - No services paid under OPPS. APC/ASC return buffer filled in with default values and ASC group number (See App F). 1 - One or more services paid under OPPS. APC/ASC return buffer filled in with APC.
VersionUsed	8	1	yy.vv.rr	Version ID of the version used for processing the claim (e.g., 2.1.0).
Patient Status	2	1		Patient status code - transferred from input.
Opps Flag	1	1	1-2*	OPPS/Non-OPPS flag - transferred from input. *A blank, zero or any other value is defaulted to 1
Non-OPPS bill type flag	1	1	1-2	Assigned by OCE based on presence/absence of ASC code 1 = Bill type should be 83x (v8.2 - v8.3 only; ASC list & 83x TOB removed v9.0) 2 = Bill type should not be 83x

Table 5: Claim Return Buffer

[a]Edit 46 terminates processing only for those bill types where no other edits are applied (See App. F).

Table 6 summarizes the edit return buffers, claim disposition and claim reasons. Table 6 also summarizes the pre and post payment status of each edit.

Table 6: Relationship between Edits, Disposition and Reasons (part 1 of 2)

Day denial or rejection means that all line items occurring on the day of the day denial or rejection will have the line item denial or rejection indicator (Table 7) set to 1.

	Edit Buffers (see Table 3)					Claim Disposition (see Table 5)						Claim Reason (see Table 4)						Edit Occurs on Multi-day Claim					
	DX	Proc	Mod	Line Item Date	Rev Code	Deny	Reject	RTP	Susp	Line Item Denial	Line Item Reject	Deny	Reject	RTP	Susp	Line Item Denial	Line Item Reject	RTP Whole Claim	Susp Whole Claim	Reject or Deny Claim	Reject Day	Deny or Reject Day *	Pre/ Post Status
1	1							1						1				Yes					Pre
2	2							1						2				Yes					Pre
3	3							1						3				Yes					Pre
~~4~~	~~4~~	-	-	-	-	-	-	-	-	-	-	-	-	-	~~4~~	-	-	-	-	-	-	-	Post
5	5							1						5				Yes					Pre
6		6						1						6				Yes					Pre
7		7						1						7				Yes					Pre
8		8						1						8				Yes					Pre
9		9			9[a]					1						9							Pre
10		-				1						10								Yes			Pre
11		11							1						11				Yes				Pre
12		12							1						12				Yes				Pre
13		13									1						13						Pre
14		14						1						14				Yes					Pre
15		15						1						15				Yes					Pre
16		16						1						16				Yes					Pre
17		17						1						17				Yes					Pre
18		18				1						18								Yes		Yes	Pre
19		19									1						19						Pre
20		20									1						20						Pre
21		21									1						21						Pre
22			22					1						22				Yes					Pre
23				23				1						23				Yes					Pre
24				-					1						24				Yes				Pre
25								1						25				Yes					Pre
26								1						26				Yes					Pre
27							1						27							Yes			Pre
28		28									1						28						Pre
29								1						29				Yes					Pre
30									1						30				Yes				Pre
31									1						31				Yes				Pre
32									1						32				Yes				Pre
33									1						33				Yes				Pre
34									1						34				Yes				Pre
35								1						35				Yes					Pre
36									1						36				Yes				Pre
37		37						1						37				Yes					Pre
38		38						1						38				Yes					Pre

Table 6: Relationship between Edits, Disposition and Reasons (part 2 of 2)

* Day denial or rejection means that all line items occurring on the day of the day denial or rejection will have the line item denial or rejection indicator (Table 7) set to 1.

	Edit Buffers (see Table 3)					Claim Disposition (see Table 5)						Claim Reason (see Table 4)						Edit Occurs on Multi-day Claim					
	DX	Proc	Mod	Line Item Date	Rev Code	Deny	Reject	RTP	Susp	Line Item Denial	Line Item Reject	Deny	Reject	RTP	Susp	Line Item Denial	Line Item Reject	RTP Whole Claim	Susp Whole Claim	Reject or Deny Claim	Reject Day	Deny or Reject Day *	Pre/ Post Status
39		39									1						39						Pre
40		40									1						40						Pre
41					41			1						41				Yes					Pre
42		42						1						42				Yes					Pre
43		43						1						43				Yes					Pre
44		44						1						44				Yes					Pre
45		45									1						45						Pre
46								1						46				Yes					Pre
47		47									1						47						Pre
48					48			1						48				Yes					Pre
49		49								1						49						Yes	Pre
50		50			50[b]			1						50				Yes					Pre
51		51						1						51				Yes					Pre
52		52						1						52				Yes					Pre
53		53									1						53						Pre
54		54						1						54				Yes					Pre
55		55						1						55				Yes					Pre
56		56						1						56				Yes					Pre
57		57							1						57				Yes				Pre
58		58						1						58				Yes					Pre
59		59						1						59				Yes					Pre
60		60						1						60				Yes					Pre
61		61						1						61				Yes					Pre
62		62						1						62				Yes					Pre
63		63						1						63				Yes					Pre
64		64									1						64						Pre
65					65						1						65						Pre
66		66							1						66				Yes				Pre
67		67									1						67						Pre
68		68									1						68						Pre
69		69									1						69						Pre
70								1						70				Yes					Pre
71		71						1						71				Yes					Pre
72		72						1						72				Yes					Pre
73		73						1						73				Yes					Pre
74		74						1						74				Yes					Pre
75			75					1						75				Yes					Pre
76		76									1						76						Pre
77		77						1						77				Yes					Pre
	DX	Proc	Mod	Line Item	Rev Code	Deny	Reject	RTP	Susp	Line Item	Line Item	Deny	Reject	RTP	Susp	Line Item	Line Item	RTP Whole	Susp Whole	Reject or	Reject Day	Deny or	Pre/ Post

				Date						Denial	Reject					Denial	Reject	Claim	Claim	Deny Claim		Reject Day *	Status
78		78						1						78				Yes					Pre

[a]Edit 9 will be returned in the Revenue code edit return buffer for revenue code 099x when no HCPCS code is on the line
[b]Edit 50 will be returned in the Revenue code edit return buffer for revenue code 0637 when no HCPCS code is on the line

Table 7 describes the APC/ASC return buffer. The APC/ASC return buffer contains the APC for each line item along with the relevant information for computing OPPS payment for OPPS hospital claims. Two APC numbers are returned in the APC/ASC fields: HCPCS APC and payment APC. Except when specified otherwise (e.g., partial hospitalization, mental health, observation logic, codes with SI of Q, etc.), the HCPCS APC and the payment APC are always the same. The APC/ASC return buffer contains the information that will be passed to the OPPS PRICER. The APC is only returned for claims from HOPDs that are subject to OPPS, and for the special conditions specified in Appendix F-a.

The APC/ASC return buffer for the PC program interface also contains the ASC payment groups for procedures on certain Non-OPPS hospital claims. The ASC group number is returned in the payment APC/ASC field, the HCPCS ASC field is zero-filled [v8.2 – v8.3 only].

Table 7: APC/ASC Return Buffer (Part 1 of 2)

	Size (bytes)	Values	Description
HCPCS procedure code	5	Alpha	For potential future use by Pricer. Transfer from input
Payment APC/ASC*	5	00001-nnnnn	APC used to determine payment. If no APC assigned to line item, the value 00000 is assigned. For partial hospitalization and some inpatient-only procedure claims the payment APC may be different than the APC assigned to the HCPCS code. ASC group for the HCPCS code.
HCPCS APC	5	00001-nnnnn	APC assigned to HCPCS code
Status indicator**	2	Alpha [Right justified, blank filled]	A - Services not paid under OPPS; paid under fee schedule or other payment system. B - Non-allowed item or service for OPPS C - Inpatient procedure E - Non-allowed item or service F - Corneal tissue acquisition; certain CRNA services and hepatitis B vaccines G - Drug/Biological Pass-through H – Pass-through device categories, brachytherapy sources, and radiopharmaceutical agents J - New drug or new biological pass-through [1] K - Non pass-through drugs and biologicals, blood and blood products L – Flu/PPV vaccines M – Service not billable to the FI/MAC N - Items and Services packaged into APC rates P - Partial hospitalization service Q - Packaged services subject to separate payment based on payment criteria S - Significant procedure not subject to multiple procedure discounting T - Significant procedure subject to multiple procedure discounting V - Clinic or emergency department visit W – Invalid HCPCS or Invalid revenue code with blank HCPCS X - Ancillary service Y – Non-implantable DME Z – Valid revenue with blank HCPCS and no other SI assigned
Payment indicator**	2	Numeric (1- nn) [Right justified, blank filled].	1 - Paid standard hospital OPPS amount (status indicators K, S, T, V, X) 2 - Services not paid under OPPS; paid under fee schedule or other payment system (SI A) 3 - Not paid (Q, M, W,Y, E), or not paid under OPPS (B, C, Z) 4 - Paid at reasonable cost (status indicator F, L) 5 – Paid standard amount for pass-through drug or biological (status indicator G) 6 – Payment based on charge adjusted to cost (status indicator H) 7 – Additional payment for new drug or new biological (status indicator J) 8 - Paid partial hospitalization per diem (status indicator P) 9 - No additional payment, payment included in line items with APCs (status indicator N, or no HCPCS code and certain revenue codes, or HCPCS codes G0176 (activity therapy), G0129 (occupational therapy), or G0177 (patient education and training service))
Discounting formula number**	1	1-9	See Appendix D for values
Line item denial or rejection flag**	1	0-2	0 - Line item not denied or rejected 1 - Line item denied or rejected (edit return buffer for line item contains a 9, 13, 18, 19, 20, 21, 28, 39, 40, 45, 47 ,49, 53, 64, 65, 67, 68, 69, 76) 2- The line is not denied or rejected, but occurs on a day that has been denied or rejected (not used as of 4/1/02 - v3.0).
Packaging flag**	1	0-4	0 - Not packaged 1 – Packaged service (status indicator N, or no HCPCS code and certain revenue codes) 2 – Packaged as part of partial hospital per diem or daily mental health service per diem 3 – Artificial charges for surgical procedure (submitted charges for surgical HCPCS < $1.01) 4 – Packaged as part of drug administration APC payment (v6.0 – v7.3 only)

Name	Size (bytes)	Values	Description
Payment adjustment flag**	2	0-8, 91-99 [Right justified, blank filled]	0 - No payment adjustment 1 – Paid standard amount for pass-through drug or biological (status indicator G) 2 – Payment based on charge adjusted to cost (status indicator H) 3 – Additional payment for new drug or new biological applies to APC (status indicator J) [1] 4 – Deductible not applicable (specific list of HCPCS codes) 5 – Blood/blood product used in blood deductible calculation 6 – Blood processing/storage not subject to blood deductible 7 - Item provided without cost to provider 8 – Item provided with partial credit to provider 91 – 99 Each composite APC present, same value for prime and non-prime codes.
Payment Method Flag**	1	0-4	0 - OPPS pricer determines payment for service 1 - Based on OPPS coverage or billing rules, the service is not paid 2 - Service is not subject to OPPS 3 - Service is not subject to OPPS, and has an OCE line item denial or rejection 4 - Line item is denied or rejected by FI/MAC; OCE not applied to line item
Service units	7	1-x	Transferred from input, for Pricer. For the line items assigned APCs 33 or 34, the service units are always assigned a value of one by the OCE even if the input service units were greater than one [Input service units also may be reduced for some Drug administration APCs, based on Appendix I (v6.0 – v7.3 only)]
Charge	10	nnnnnnnnnn	Transferred from input, for Pricer; COBOL pic 9(8)v99
Line item action flag**	1	0-4	Transferred from input to Pricer, and can impact selection of discounting formula (AppxD). 0 - OCE line item denial or rejection is not ignored 1 - OCE line item denial or rejection is ignored 2 - External line item denial. Line item is denied even if no OCE edits 3 - External line item rejection. Line item is rejected even if no OCE edits 4 - External line item adjustment. Technical charge rules apply.

Table 7: APC/ASC Return Buffer (Part 2 of 2)

[1] Status indicator J was replaced by status indicator G starting in April, 2002 (V3.0)
***** ASC # returned **only** for TOB 83x, on the PC version output report, for v8.2 & v8.3
****** Not activated for claims with Opps flag = 2 (blanks are returned in the APC/ASC Return Buffer)

Appendix A (OPPS & Non-OPPS)
Bilateral Procedure Logic

There is a list of codes that are exclusively bilateral if a modifier of 50 is present*. The following edits apply to these bilateral procedures*.

Condition	Action	Edit
The same code which can be performed bilaterally occurs two or more times on the same date of service, all codes *without* a 50 modifier	Return claim to provider	16
The same code which can be performed bilaterally occurs two or more times (based on units and/or lines) on the same date of service, all or some codes *with* a 50 modifier	Return claim to provider	17

There is a list of codes that are considered inherently bilateral even if a modifier of 50 is not present. The following edit applies to these bilateral procedures**.

Condition	Action	Edit
The same bilateral code occurs two or more times (based on units and/or lines) on the same date of service	Return claim to provider	17***

There are two lists of codes, one is considered conditionally bilateral and the other independently bilateral if a modifier 50 is present. The following edit applies to these bilateral procedures (effective 10/1/06). [OPPS claims only]

Condition	Action	Edit
The bilateral code occurs with modifier 50 and more than one unit of service on the same line	Return claim to provider	74

Note: For ER and observation claims, all services on the claim are treated like any normal claim, including multiple day processing.

*Note: The “exclusively bilateral” list was eliminated, effective 10/1/05 (v6.3); edits 16 and 17 will not be triggered by the presence/absence of modifier 50 on certain bilateral codes for dates of service on or after 10/1/05.

** Exception: For codes with SI of V that are also on the Inherent Bilateral list, condition code ‘G0’ will take precedence over the bilateral edit; these claims will not receive edit 17 nor be returned to provider.

*** Exception: Edit 17 is not applied to Non-OPPS TOB 85x

Appendix B (OPPS Only)
Rules for Medical and Procedure Visits on the Same Day and for Multiple Medical Visits on Same Day

Under some circumstances, medical visits on the same date as a procedure will result in additional payments. A modifier of **25** with an Evaluation and Management (E&M) code, status indicator V, is used to report a medical visit that takes place on the same date that a procedure with status indicator S or T is performed, but that is significant and separately identifiable from the procedure. However, if any E&M code that occurs on a day with a type "T" or "S" procedure does not have a modifier of 25, then edit 21 will apply and there will be a line item rejection.

If there are multiple E&M codes on the same day, on the same claim the rules associated with multiple medical visits are shown in the following table.

E&M Code	Revenue Center	Condition Code	Action	Edit
2 or more	Revenue center is different for each E&M code, and all E&M codes have units equal to 1.	Not G0	Assign medical APC to each line item with E&M code	-
2 or more	Two or more E&M codes have the same revenue center **OR** One or more E&M codes with units greater than one had same revenue center	Not G0	Assign medical APC to each line item with E&M code and Return Claim to Provider	42
2 or more	Two or more E&M codes have the same revenue center **OR** one or more E&M codes with units greater than one had same revenue center	G0*	Assign medical APC to each line item with E&M code	-

The condition code G0 specifies that multiple medical visits occurred on the same day with the same revenue center, and that these visits were distinct and constituted independent visits (e.g., two visits to the ER for chest pain).

* For codes with SI of V that are also on the Inherent Bilateral list, condition code 'G0' will take precedence over the bilateral edit to allow multiple medical visits on the same day.

Appendix C-a (OPPS Only)
Partial Hospitalization Logic

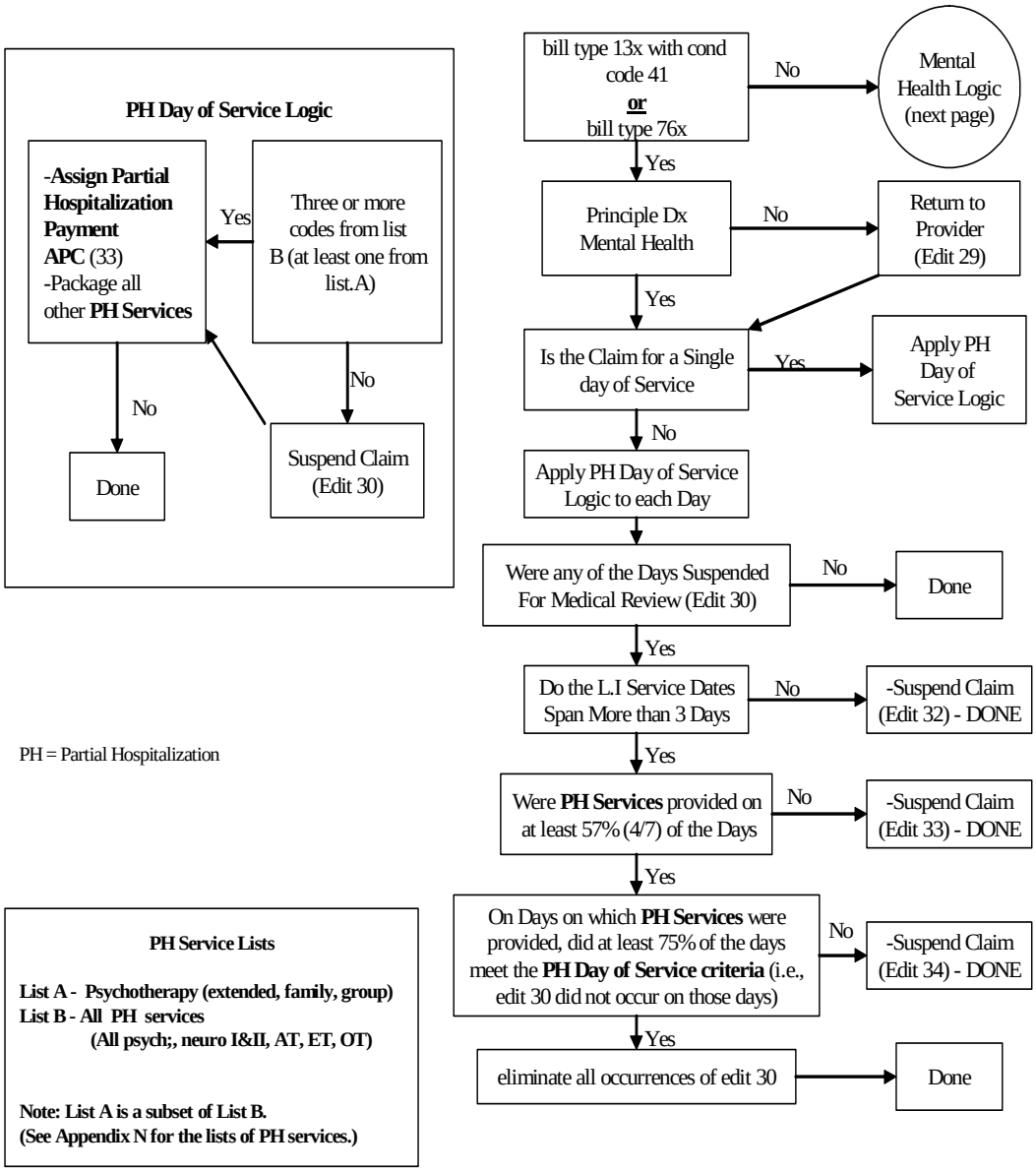

PH = Partial Hospitalization

PH Service Lists

List A - Psychotherapy (extended, family, group)
List B - All PH services
(All psych;, neuro I&II, AT, ET, OT)

Note: List A is a subset of List B.
(See Appendix N for the lists of PH services.)

+ Multiple occurrences of services from list A or B are treated as separate units in determining whether 3 or more PH services are present..

Assign Partial Hospitalization Payment APC
For any day that has a PH service, the first listed line item from the following hierarchical list (List A, other codes in list B) is assigned a payment APC of 33, a status indicator of P, a payment indicator of 8, a discounting factor of 1, a line item denial or rejection indicator of 0, a packaging flag of 0, a payment adjustment flag of 0, and a service unit of 1

For all other line items with a **partial hospital service** (List B), the SI is changed to N and packaging flag is set to 2
For ALL lines with a partial hospital service (List B), the HCPCS APC is set to 0 (effective **1/1/08**)

Appendix C-b (cont'd)
Mental Health Logic

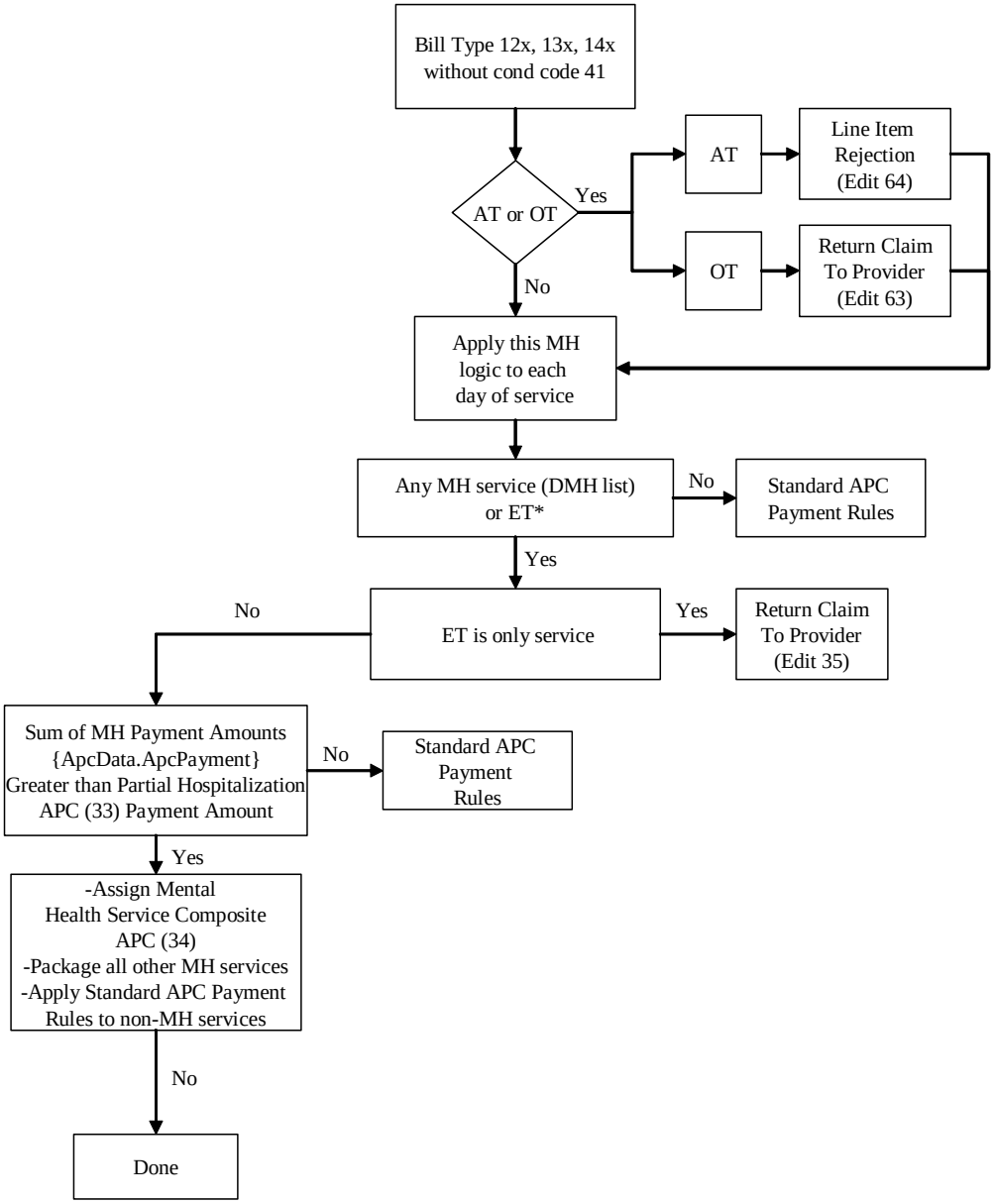

Assign Mental Health Service Composite APC
The first listed line item with HCPCS code from the list of Daily MH services (DMH list) is assigned a payment APC of 34, a status indicator of P, a payment indicator of 8, a discounting factor of 1, a line item denial or rejection indicator of 0, a packaging flag of 0, a payment adjustment flag of 0 and a service unit of 1.

For all other line items with a **daily mental health service** (DMH list), the SI is changed to N and the packaging flag is set to 2.

*NOTE: The use of code G0177 (ET) is allowed on MH claims that are not billed as Partial Hospitalization

Appendix D
Computation of Discounting Fraction (OPPS Only)

Type "T" Multiple and Terminated Procedure Discounting:
Line items with a status indicator of "T" are subject to multiple-procedure discounting *unless modifiers 76, 77, 78 and/or 79 are present*. The "T" line item with the highest payment amount will *not* be multiple procedure discounted, and all other "T" line items will be multiple procedure discounted. All line items that do not have a status indicator of "T" will be ignored in determining the multiple procedure discount. A modifier of 52 or 73 indicates that a procedure was terminated prior to anesthesia. A terminated type "T" procedure will also be discounted although not necessarily at the same level as the discount for multiple type "T" procedures.

Terminated bilateral procedures or terminated procedures with units greater than one should not occur, and have the discounting factor set so as to result in the equivalent of a single procedure. Claims submitted with terminated bilateral procedures or terminated procedure with units greater than one are returned to the provider (edit 37).

Bilateral procedures are identified from the "bilateral" field in the physician fee schedule. Bilateral procedures have the following values in the "bilateral" field:

1. Conditional bilateral (i.e. procedure is considered bilateral if the modifier 50 is present)
2. Inherent bilateral (i.e. procedure in and of itself is bilateral)
3. Independent bilateral (i.e., procedure is considered bilateral if the modifier 50 is present, but full payment should be made for each procedure (e.g., certain radiological procedures))

Inherent bilateral procedures will be treated as non-bilateral procedures since the bilateralism of the procedure is encompassed in the code. For bilateral procedures the type "T" procedure discounting rules will take precedence over the discounting specified in the physician fee schedule.

All line items for which the line item denial or reject indicator is 1 and the line item action flag is zero, or the line item action flag is 2, 3 or 4, will be ignored in determining the discount; packaged line items, (the packaging flag is not zero or 3), will also be ignored in determining the discount. The discounting process will utilize an APC payment amount file. The discounting factor for bilateral procedures is the same as the discounting factor for multiple type "T" procedures.

Non-Type T Procedure Discounting:
Line items with SI other than "T" (except line items with SI of "S" and "X") are also subject to bilateral procedure discounting with modifier 50, if identified in the physician fee schedule as Conditional bilateral.
All line items with SI other than "T" are subject to terminated procedure discounting when modifier 52 or 73 is present.

There are nine different discount formulas that can be applied to a line item.

1. 1.0
2. (1.0 + D(U-1))/U
3. T/U
4. (1 + D)/U
5. D
6. *TD/U
7. *D(1 + D)/U
8. 2.0
9. 2D/U

Where

D = discounting fraction (currently 0.5)
U = number of units
T = terminated procedure discount (currently 0.5)

***Note**: Effective 1/1/08 (v9.0), formula #6 and #7 discontinued; new formula #9 created.

The discount formula that applies is summarized in the following table.

			Discounting Formula Number			
			Type "T" Procedure		Non Type "T" Procedure	
Payment Amount	**Modifier 52 or 73**	**Modifier 50**	**Conditional or Independent Bilateral**	**Inherent or Non Bilateral**	**Conditional or Independent Bilateral**	**Inherent or Non Bilateral**
Highest	No	No	2	2	1	1
Highest	Yes	No	3	3	3	3
Highest	No	Yes	4	2	4/8*	1
Highest	Yes	Yes	3	3	3	3
Not Highest	No	No	5	5	1	1
Not Highest	Yes	No	3	3	3	3
Not Highest	No	Yes	9	5	4/8*	1
Not Highest	Yes	Yes	3	3	3	3

For the purpose of determining which APC has the highest payment amount, the terminated procedure discount (**T**) and any applicable offset, will be applied prior to selecting the type T procedure with the highest payment amount. If both offset and terminated procedure discount apply, the offset will be applied first, before the terminated procedure discount.

*If not terminated, non-type T Conditional bilateral procedures with modifier 50 will be assigned discount formula #4; exception, conditional bilateral procedures with SI of “S” or “X”, with modifier 50, will be assigned to f**ormula #8 - effective 4/1/08.**
Non-type T Independent bilateral procedures with modifier 50 will be assigned to formula #8.

Effective 1/1/08 (v9.0), Use of formula #6 and formula #7 discontinued; replaced by formula #3 and new formula #9

Appendix E(a) [OPPS flag =1]
Logic for Assigning Payment Method Flag Values

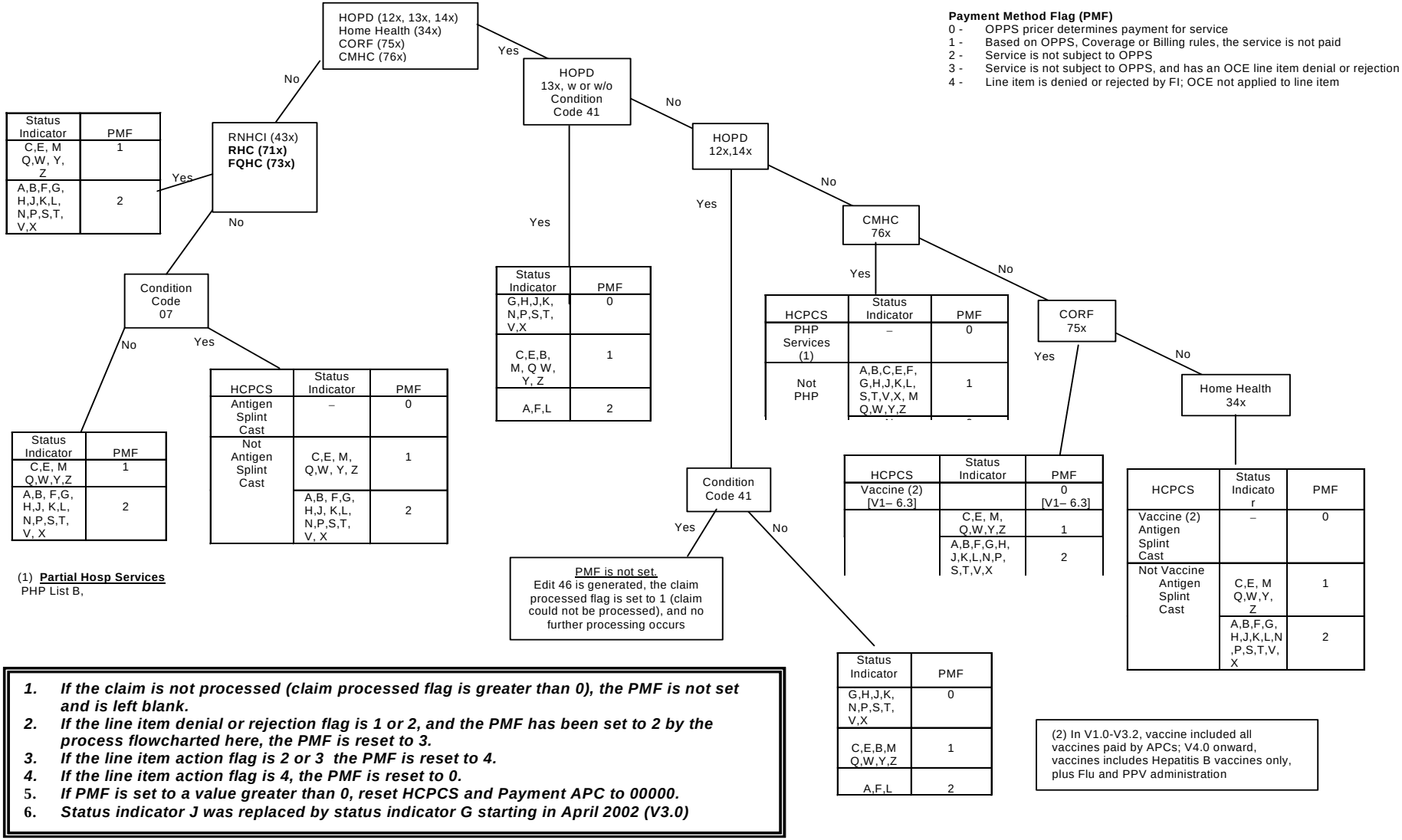

Payment Method Flag (PMF)

0 - OPPS pricer determines payment for service
1 - Based on OPPS, Coverage or Billing rules, the service is not paid
2 - Service is not subject to OPPS
3 - Service is not subject to OPPS, and has an OCE line item denial or rejection
4 - Line item is denied or rejected by FI; OCE not applied to line item

Status Indicator	PMF
C,E, M Q,W, Y, Z	1
A,B,F,G, H,J,K,L, N,P,S,T, V,X	2

Status Indicator	PMF
G,H,J,K, N,P,S,T, V,X	0
C,E,B, M, Q W, Y, Z	1
A,F,L	2

HCPCS	Status Indicator	PMF
PHP Services (1)	–	0
Not PHP	A,B,C,E,F, G,H,J,K,L, S,T,V,X, M Q,W,Y,Z	1

Status Indicator	PMF
C,E, M Q,W,Y,Z	1
A,B, F,G, H,J, K,L, N,P,S,T, V, X	2

HCPCS	Status Indicator	PMF
Antigen Splint Cast	–	0
Not Antigen Splint Cast	C,E, M, Q,W, Y, Z	1
	A,B, F,G, H,J, K,L, N,P,S,T, V, X	2

HCPCS	Status Indicator	PMF
Vaccine (2) [V1– 6.3]		0 [V1– 6.3]
	C,E, M, Q,W,Y,Z	1
	A,B,F,G,H, J,K,L,N,P, S,T,V,X	2

HCPCS	Status Indicator	PMF
Vaccine (2) Antigen Splint Cast	–	0
Not Vaccine Antigen Splint Cast	C,E, M Q,W,Y, Z	1
	A,B,F,G, H,J,K,L,N ,P,S,T,V, X	2

Status Indicator	PMF
G,H,J,K, N,P,S,T, V,X	0
C,E,B,M Q,W,Y,Z	1
A,F,L	2

1. ***If the claim is not processed (claim processed flag is greater than 0), the PMF is not set and is left blank.***
2. ***If the line item denial or rejection flag is 1 or 2, and the PMF has been set to 2 by the process flowcharted here, the PMF is reset to 3.***
3. ***If the line item action flag is 2 or 3 the PMF is reset to 4.***
4. ***If the line item action flag is 4, the PMF is reset to 0.***
5. ***If PMF is set to a value greater than 0, reset HCPCS and Payment APC to 00000.***
6. ***Status indicator J was replaced by status indicator G starting in April 2002 (V3.0)***

a/apc/pmf

Appendix E(b) [OPPS flag = 2] **[Not activated]**.
Logic for Assigning Non-OPPS Hospital Payment Method Flag Values

[PMF values not returned on claims with OPPS flag = 2]

Payment Method Flag (PMF)
0 - OPPS pricer determines payment for service
1 - Based on OPPS, Coverage or Billing rules, the service is not paid
2 - Service is not subject to OPPS
3 - Service is not subject to OPPS, and has an OCE line item denial or rejection
4 - Line item is denied or rejected by FI; OCE not applied to line item

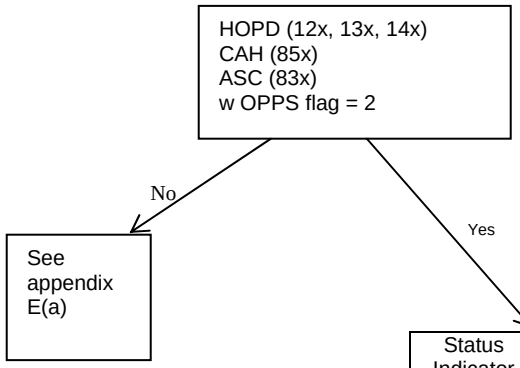

Status Indicator	PMF
C, E, M, W, Y, Z	1
A, B, F, G, H, K, L, N, P,Q, S, T, V, X	2

1. ***If the claim is not processed (claim processed flag is greater than 0), the PMF is not set and is left blank.***
2. ***If the line item denial or rejection flag is 1 or 2, and the PMF has been set to 2 by the process flowcharted here, the PMF is reset to 3.***
3. ***If the line item action flag is 2 or 3 the PMF is reset to 4.***
4. ***If the line item action flag is 4, the PMF is reset to 0.***

Appendix F(a) - OCE Edits Applied by Bill Type [OPPS flag =1]

FLOW CHART CELL (*)	Provider/Bill Types	Dx [1-5]	Proc [7, 8, 9, 11, 12, 50, 53[c], 54, 59, 69]	HCPC [6,13]	OPPS site of svc [14]	Non Mcare [28] Non OPPS [62]	Proc & Modifier [18,38,43,45,47,49,71,73,75,77[k],78]	HCPCS Req'd [48[d]]	Modifier [16,17,22[b],37,74]	CCI [19,20,39,40]	Units [15]	[a] Line Item Date [23]	Rev Code [41,65]	Rev Code [44]	Age, Sex [25,26]	Partial Hosp [29-34]	APC [21,27,42]	MH [35,36, 63, 64]	Bill Type [46]	APC buffer completed	Obs Logic [52,56,57], DirAdm [58], Spec Inpt [60], Manual Price [66, 70], FDA/NCD [67, 68]; Trauma[76]	Opps Proc (55)	DME (61); Not FI/MAC (72)
1	12X or 14X w cond code 41	No	No	No	No	No	No	No	No	No	No	No	No	No	No	No	No	No	Yes	No	No	No	No
2	12X or 14X w.o cond code 41	Yes	Yes	Yes	Yes	Yes	Yes	Yes	Yes	Yes	Yes	Yes	Yes	Yes	Yes	No	Yes	Yes	No	Yes	No	No	Yes
3	13X w condition code 41	Yes	Yes	Yes	Yes	Yes	Yes	Yes	Yes	Yes	Yes	Yes	Yes	Yes	Yes	Yes	Yes	No	No	Yes	Yes	No	Yes
4	13X w.o condition code 41	Yes	Yes	Yes	Yes	Yes	Yes	Yes	Yes	Yes	Yes	Yes	Yes	Yes	Yes	No	Yes	Yes	No	Yes	Yes	No	Yes
5	76X (CMHC)	Yes	Yes	Yes	No	No	Yes	Yes	No	No	Yes	Yes	Yes	Yes	Yes	Yes	No	No	No	Yes	No	Yes	Yes
6	34X[h](HHA) w Vaccine[e], Antigen, Splint or Cast	Yes	Yes	Yes	No	Yes	Yes	No	No	Yes	Yes	No	Yes	Yes	Yes	No	No	No	No	Yes	No	Yes	No
7	34X[h] (HHA) w.o Vaccine[e], Antigen, Splint or Cast	Yes	Yes	Yes	No	No	No	No	No	Yes	No	No	Yes	Yes	Yes	No	No	No	No	No	No	Yes	No
8	75X(CORF) w Vac(PPS)[v1-6.3]	Yes	Yes	Yes	No	Yes	Yes	Yes	No	Yes	Yes	No	Yes	Yes	Yes	No	No	No	No	Yes	No	Yes	Yes
9	43X (RNHCI)	No	No	No	No	No	No	No	No	No	No	No	Yes	Yes	Yes	No	No	No	Yes	No	No	Yes	No
10	71X (RHC), 73X (FQHC)	Yes	No	No	No	No	No	No	No	No	No	No	Yes	No	Yes	No	No	No	No	No	No	No	Yes
11	Any bill type except 12x,13x, 14x, 34x, 43x, 71x, 73x, 76x, w CC 07, w Antigen, Splint or Cast	Yes[f]	Yes[f]	Yes	No	Yes	Yes	No	No	No	No	Yes	Yes	Yes	Yes	No	No	No	No	Yes	No	Yes	No
12	75X[h] (CORFs)	Yes	Yes	Yes	No	No	No	Yes	No	Yes	Yes	Yes	Yes	Yes	Yes	No	No	No	No	No	No	Yes	Yes
13	22X[hj], 23X[hj] (SNF), 24X[g]	Yes	Yes	Yes	No	Yes[J]	No	No	No	Yes	No	Yes	Yes	Yes	Yes	No	No	No	No	No	No	Yes	Yes
14	32X, 33X (HHA)	Yes[f]	Yes[f]	No	No	No	No	No	No	No	No	No	Yes	Yes	Yes	No	No	No	No	No	No	Yes	No
15	72X (ESRD)	Yes	Yes	No	No	No	No	No	No	No	No	No	Yes	Yes	Yes	No	No	No	No	No	No	Yes	Yes
16	74X[h] (OPTs)	Yes	Yes	Yes	No	No	No	Yes	No	Yes	No	No	Yes	Yes	Yes	No	No	No	No	No	No	Yes	Yes
17	81x (Hospice), 82x	Yes	Yes	No	No	No	No	No	No	No	No	No	Yes	Yes	Yes	No	No	No	No	No	No	Yes	Yes

(*) FLOW CHART CELLS ARE IN HIERARCHICAL ORDER

Yes = edits apply, No = edits do not apply

Edit 10, and Edits 23 and 24 for From/Through dates, are not dependent on AppxF

[a] if edit 23 is not applied, the lowest service (or From) date is substituted for invalid dates, and processing continues.

[b] Bypass edit 22 if Revenue code is 540 [c] Edits 53 not applicable for bill type 13x [K] Edits 77 not applicable to bill type 12x

[d] Bypass edit 48 if Revenue code is 100x, 210x, 310x,0905, 0906, 0907; 0500, 0509, 0583, 0660-0663, 0669, 0931, 0932; 0521, 0522, 0524, 0525, 0527, 0528;0948, 099x, 0637

[e] In V1.0 to V3.2,"vaccines" included all vaccines paid by APCs; from V4.0 onward, "vaccines" includes Hepatitis B vaccines only, plus Flu and PPV administration

[f] Bypass diagnosis edits (1-5) for bill types 32X and 33X (HHA) if from date is <10/1/xx and Through date is >= 10/1/xx

[g] Delete TOB 24X effective 10/1/05 [h] Apply CCI edits to TOB 22x, 23x, 34x, 74x and 75x, effective 1/1/06 [j] Apply edit 28, effective 10/1/05

Appendix F(a) Flow Chart [OPPS flag = 1]

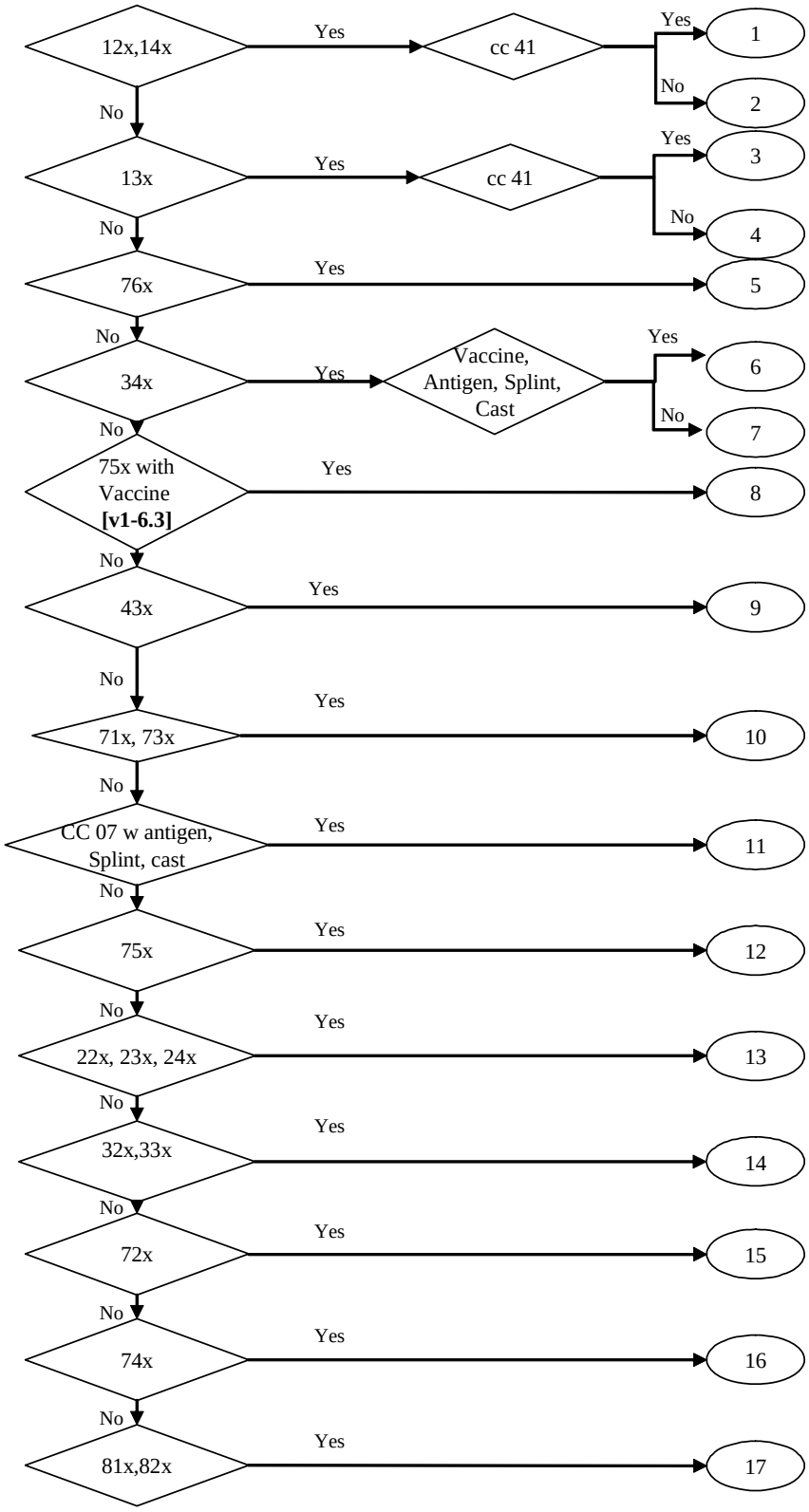

Appendix F(b) - OCE Edits Applied by Non-OPPS Hospital Bill Type [OPPS flag = 2]

Provider/Bill Types	Dx [1-3, 5]	Proc [8, 9, 11, 12, 50, 53[c], 54, 69]	HCPC [6]		Non Mcare [28]	Proc & Modifier [18, 45, 49]	HCPC Req'd [48[d]]	Modifier [17[e], 22b]	CCI [19,20,39,40]	Units [15]	[a]Line Item Date [23]	Rev Code [41, 65]		Age, Sex [25,26]	Partial Hosp [29-34]	APC [21,27,42]	MH [35, 63, 64]	Bill Type [46]	APC/ASC buffer completed	FDA/NCD [67, 68]	Opps Proc (55)	DME (61); Not HHAC (72)
12x&14x w cond code 41/OPPS flag =2	No	No	No		No	No	No	No	No	No	No	No		No	No	No	No	Yes	No	No	No	No
12x&14x w.o cond code 41/OPPS flag =2	Yes	Yes	Yes		Yes	No	No	Yes	No	Yes	Yes	Yes		Yes	No	No	No	No	No	Yes	No	Yes
13x w condition code 41/OPPS flag = 2	Yes	Yes	Yes		Yes	No	No	Yes	No	Yes	Yes	Yes		Yes	No	No	No	No	No	Yes	No	Yes
13x w.o cond code 41/OPPS flag = 2	Yes	Yes	Yes		Yes	No	No	Yes	No	Yes	Yes	Yes		Yes	No	No	No	No	No	Yes	No	Yes
85x/OPPs flag = 2	Yes	Yes	Yes		Yes	No	No	Yes	No	Yes	Yes	Yes		Yes	No	No	No	No	No	Yes	No	Yes[d]
83x/OPPs flag = 2**	Yes	Yes	Yes		Yes	No	No	Yes	No	Yes	Yes	Yes		Yes	No	No	No	No	Yes	Yes	No	Yes

(*) FLOW CHART CELLS ARE IN HIERARCHICAL ORDER

Yes = edits apply, No = edits do not apply

Edit 10, and Edits 23 and 24 for From/Through dates, are not dependent on AppxF

[a] if edit 23 is not applied, the lowest service (or From) date is substituted for invalid dates, and processing continues.

[b] Bypass edit 22 if Revenue code is 540

[c] Edit 53 is not applicable to bill type 13x or 85x

[d] Bypass edit 72 if TOB is 85x and revenue code is 096x, 097x or 098x

[e] Bypass edit 17 if TOB is 85x

** Bill type invalid for IOCE effective for dates of service on or after 1/1/08 - v9.0

Appendix G [OPPS Only]

The payment adjustment flag for a line item is set based on the criteria in the following chart:

Criteria	**Payment Adjustment Flag Value**
Status indicator G	1
Status indicator H	2
Status indicator J [1]	3
Code is flagged as 'deductible not applicable'	4
Blood product with modifier BL on RC 38X line[2]	5
Blood product with modifier BL on RC 39X line[2]	6
Item provided without cost to provider	7
Item provided with partial credit to provider	8
First composite APC present - prime & non-prime codes	91
Second composite APC present – prime & non-prime codes	92
Third composite APC present – prime & non-prime codes	93
Fourth composite APC present – prime & non-prime codes	94
Fifth thru ninth composite APC present – prime & non-prime	95 - 99
All others	0

[1] Status indicator J was replaced by status indicator G starting in April 2002 (V3.0)
[2] See Appendix J for assignment logic (v6.2)

Appendix H [OPPS Only]

OCE Observation Criteria (v3.0 – v8.3)

Rules:

1. Code G0378 is used to identify all outpatient observations, regardless of the reason for observation (diagnosis) or the duration of the service.

2. Code G0379 is used to identify direct admission from a physician's office to observation care, regardless of the reason for observation.

3. Code G0378 has default Status Indicator "Q" and default APC 0
   a. If the criteria are met for payable observation, the SI is changed to "S" and APC 339 is assigned.
   b. If the criteria for payable observation are not met, the SI is changed to "N".

4. Code G0379 has default Status Indicator "Q" and default APC 0
   a. If associated with a payable observation (payable G0378 present on the same day), the SI for G0379 is changed to "N".
   b. If the observation on the same day is not payable, the SI is changed to "V" and APC 604 is assigned.
   c. If there is no G0378 on the same day, the claim is returned to the provider.

5. Observation logic is performed only for claims with bill type 13x, with or without condition code 41.

6. Lines with G0378 and G0379 are rejected if the bill type is not 13x (or 85x).

7. If any of the criteria for separately payable observation is not met, the observation is packaged, or the claim or line is suspended or rejected according to the disposition of the observation edits.

8. In order to qualify for separate payment, each observation must be paired with a unique E/M or critical care
   a. (C/C) visit, or with code G0379 (Direct admission from physician's office).
      E/M or C/C visit is required the day before or day of observation; Direct admission is required on the day of observation.

9. If an observation cannot be paired with an E/M or C/C visit or Direct admission, the observation is packaged.

10. E/M or C/C visit or Direct admission on the same day as observation takes precedence over E/M or C/C visit on the day before observation.

11. E/M, C/C visit or Direct admission that have been denied or rejected, either externally or by OCE edits, are ignored.

12. Both the associated E/M or C/C visit (APCs 604-616, 617) and observation are paid separately if the criteria are met for separately payable observation.

13. If a "T" procedure occurs on the day of or the day before observation, the observation is packaged.

14. Multiple observations on a claim are paid separately if the required criteria are met for each one.

15. If there are multiple observations within the same time period and only one meets the criteria for separate APC payment, the observation with the most hours is considered to have met the criteria, and the other observations will be packaged.

16. Observation date is assumed to be the date admitted for observation
17. The diagnoses (patient's reason for visit or principal) required for the separately payable observation criteria are:

Chest Pain	Asthma	CHF
4110, 1, 81, 89	49301, 02, 11, 12, 21, 22, 91, 92	3918
4130, 1, 9		39891
78605, 50, 51, 52, 59		40201, 11, 91
		40401, 03, 11, 13, 91, 93
		4280, 1, 9, 20-23, 30-33, 40-43

18. The APCs required for the observation criteria to identify E/M or C/C visits are 604- 616, 617.

Appendix H-a (cont'd)
OCE Observation Criteria (v3.0 – v8.3)

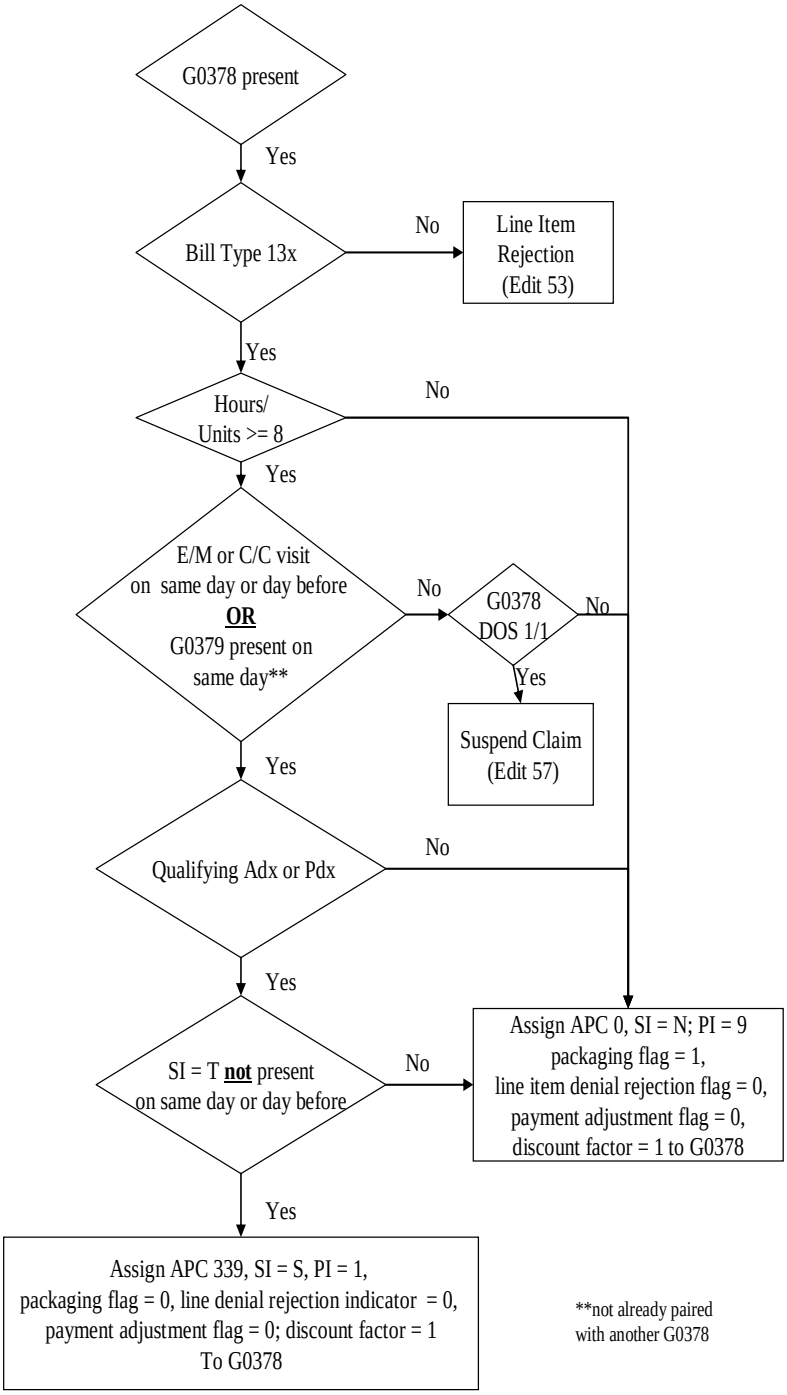

Appendix H-b (cont'd)
Direct Admission Logic

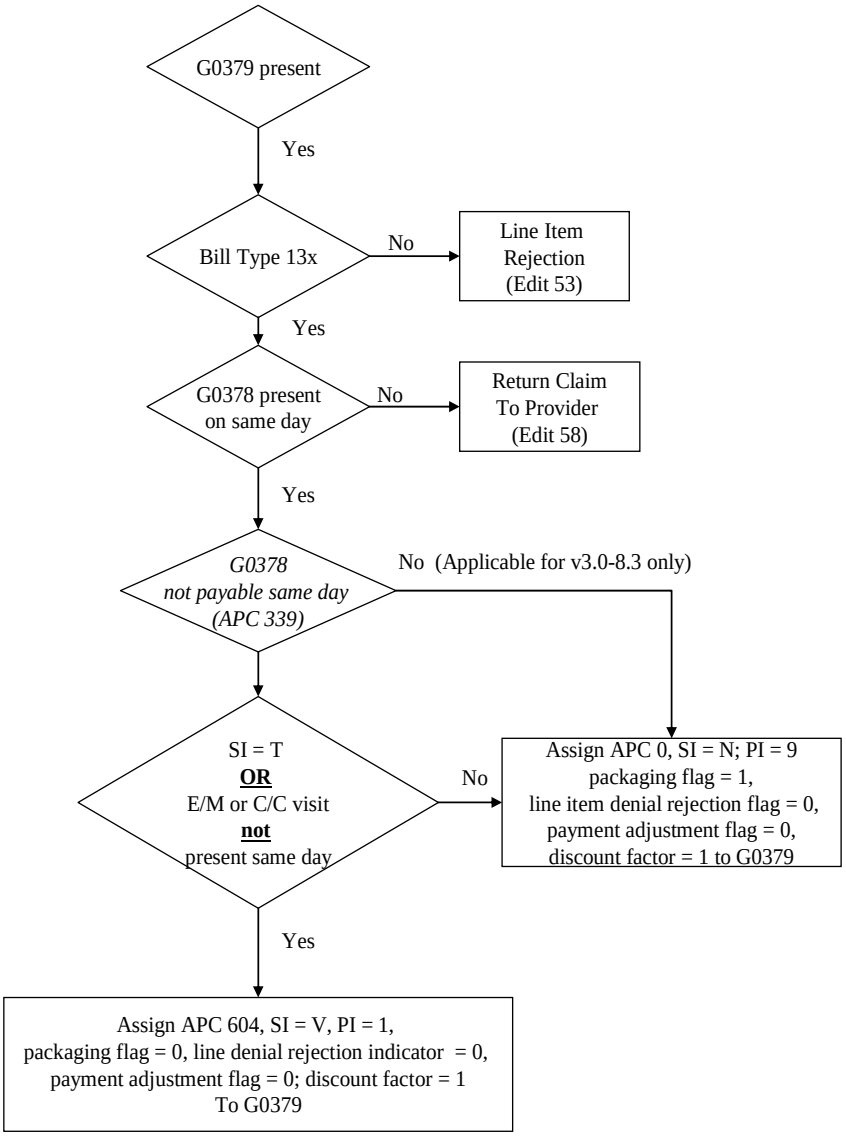

Appendix H-c (cont'd)
Extended Assessment & Management
Composite Criteria* [Effective v9.0]

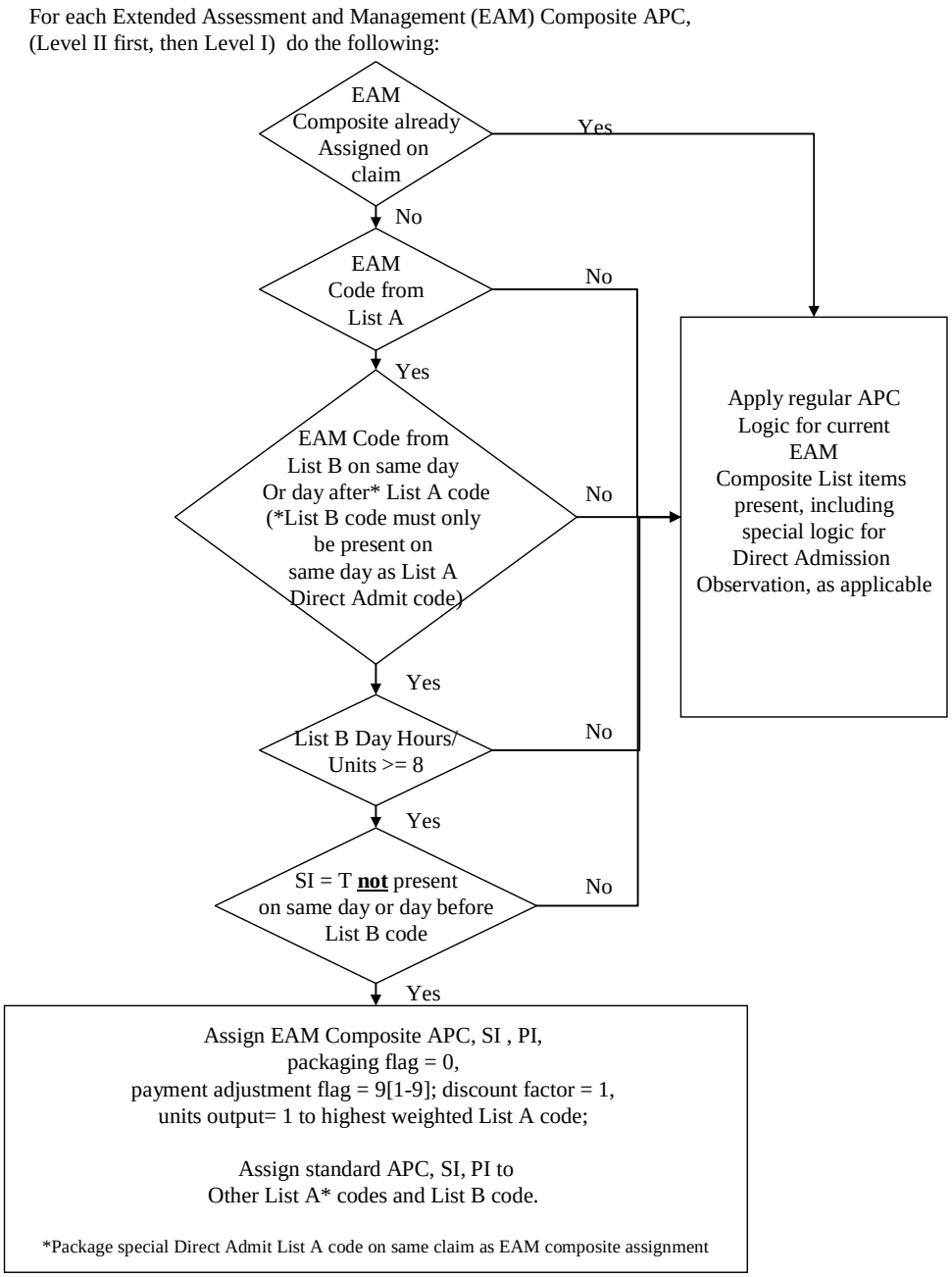

*See appendix K for general rules and code lists.

Appendix I [OPPS Only]

Drug Administration (v6.0 – v7.3 only)

For each APC X subjected to Y maximum allowed units
do the following (each day);

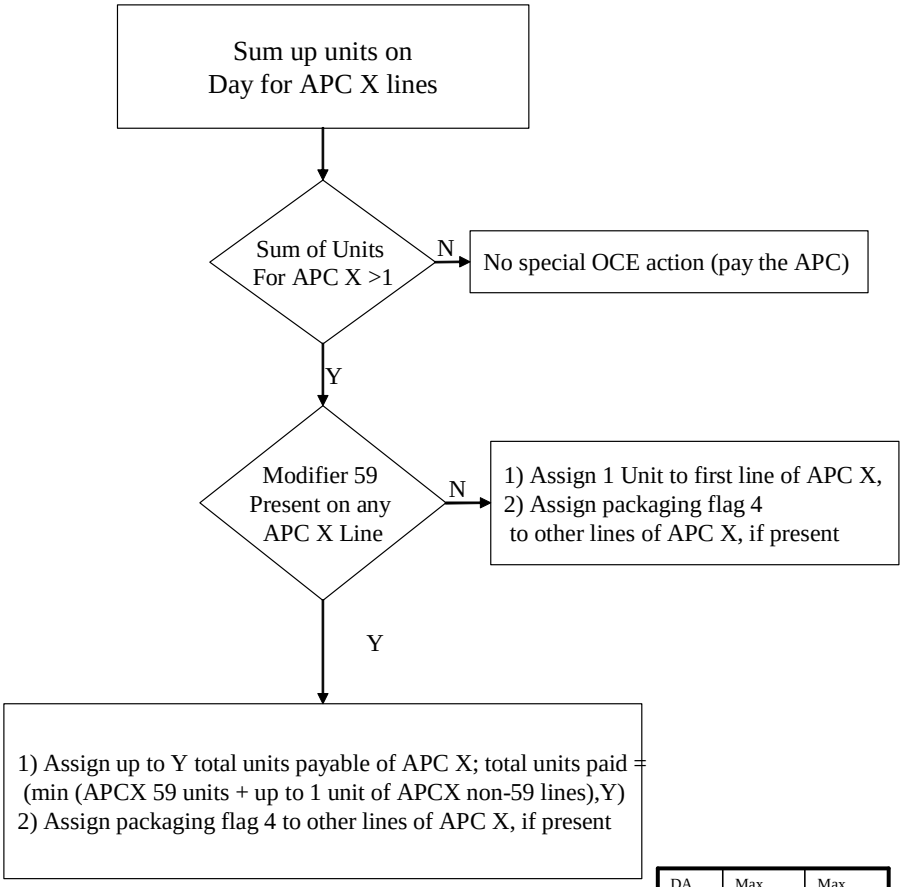

DA APC	Max APC units without modifier 59	Max APC units with modifier 59
116	1	2
117	1	2
120	1	4

Appendix J [OPPS Only]
Billing for blood/blood products

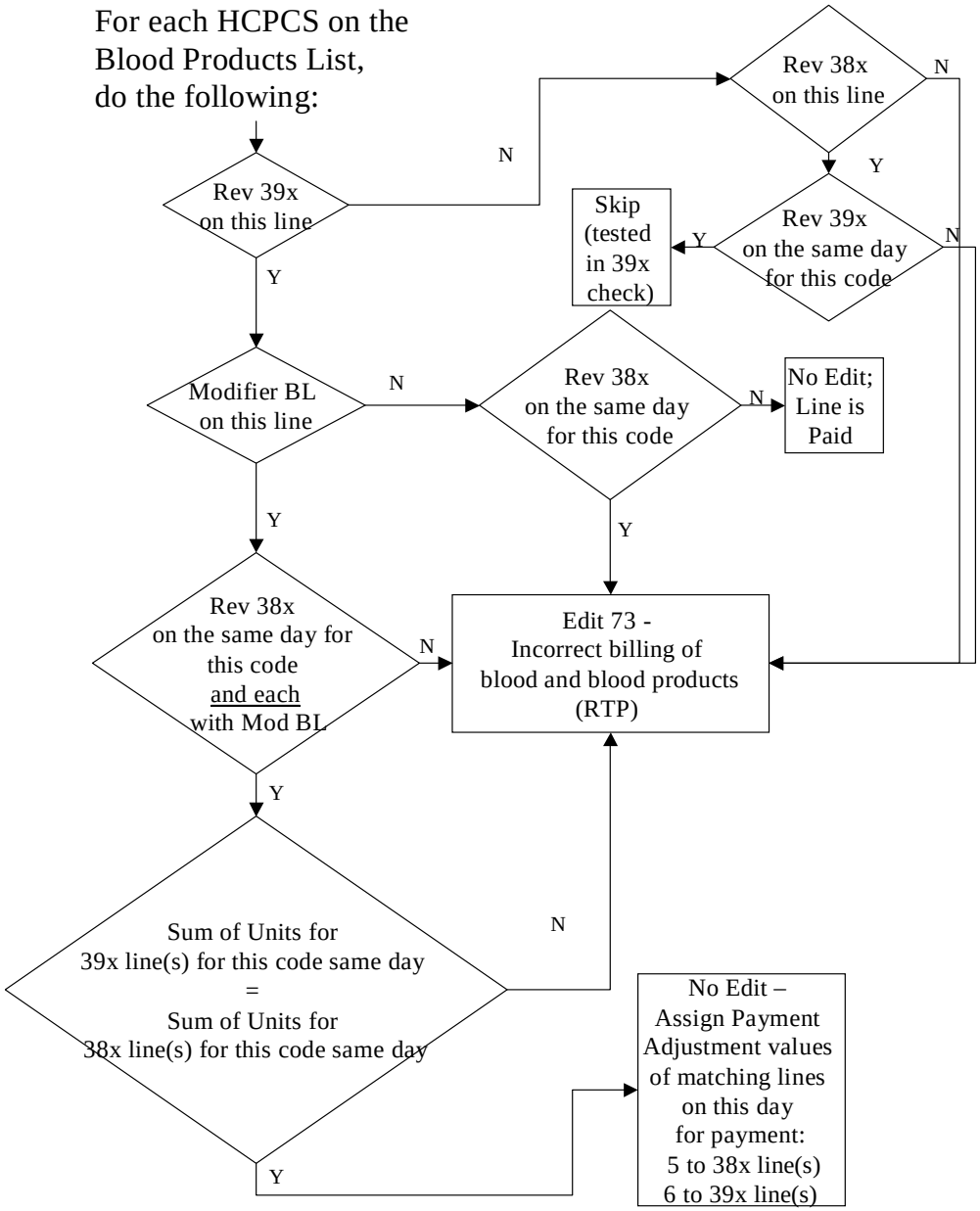

Appendix K

Composite APC Assignment Logic

LDR prostate brachytherapy and Electrophysiology/ablation composite APC assignment criteria:

a) If a 'prime' code is present with at least one non-prime code from the same composite on the same date of service, assign the composite APC and related status indicator to the prime code; assign status indicator N to the non-primary code(s) present.

-Assign units of service = 1 to the line with the composite APC

- If there is more than one prime code present, assign the composite APC to the prime code with the lowest numerical value and assign status indicator N to the additional prime code(s) on the same day.

- Assign the indicated composite payment adjustment flag to the composite and all component codes present.

b) If the composite APC assignment criterion is not met, assign the standard APC and related SI to any/all component codes present.

c) Terminated codes (modifier 52 or 73 present) are ignored in composite APC assignment.

The component codes for the composite APC assignments are:

1. **LDR Prostate brachytherapy composite**

Prime/Group A code	Non-prime/Group B codes	Composite APC
55875	77778	8001

2. **Electrophysiology/ablation composite**

Prime/Group A codes	Non-prime/Group B codes	Composite APC
93619 93620	93650 93651 93652	8000

Appendix K (cont'd)

Composite APC Assignment Logic

Extended Assessment and Management Composite APC rules:

(See appendix H-c for flowchart):

a) If the criteria for the composite APC are met, the composite APC and its associated SI are assigned to the prime code (visit or critical care).

b) Only one extended assessment and management APC is assigned per claim.

c) If the criteria are met for a level I and a level II extended assessment and management APC, assignment of the level II composite takes precedence.

d) If multiple qualifying prime codes (visit or CC) appear on the day of or day before G0378, assign the composite APC to the prime code with the highest separately paid payment rate; assign the standard APC to any/all other visit codes present.

e) Visits not paid under an extended assessment and management composite are paid separately.

Exception: Code G0379 is always packaged if there is an extended assessment and management APC on the claim.

f) The SI for G0378 is always N.

g) Level I and II extended assessment and management composite APCs have SI = V if paid.

h) The logic for extended assessment and management is performed only for bill type 13x, with or without condition code 41.

i) Hours/units of service for observation (G0378) must be at least 8 or the composite APC is not assigned.

j) If a "T" procedure occurs on the day of or day before observation, the composite APC is not assigned.

k) Assign units of service = 1 to the line with the composite APC.

l) Assign the composite payment adjustment flag to the visit line with the composite APC and to the G0378.

m) If the composite APC assignment criteria are not met, apply regular APC logic for separately paid items, special logic for G0379 and the SI for G0378 = N.

Level II Extended Assessment and Management criteria:

a) If there is at least one of a specified list of critical care or emergency room visit codes on the day of or day before observation (G0378), assign the composite APC and related SI to the critical care or emergency visit code.

b) Additional emergency or critical care visit codes (whether or not on the prime list) are assigned to their standard APCs for separately paid items.

Prime/List A codes	Non-prime/List B code	Composite APC
99284, 99285, 99291	G0378	8003

Appendix K (cont'd)

Level I Extended Assessment and Management criteria:

a) If there is at least one of a specified list of prime clinic visit codes on the day of or day before observation (G0378), or code G0379 is present on the same day as G0378, assign the composite APC and related status indicator to the clinic visit or direct admission code.

b) Additional clinic visit codes (whether or not on the prime list) are assigned to their standard APCs for separately paid items.

c) Additional G0379, **on the same claim**, are assigned SI = N.

Prime /List A codes	Non-prime/List B code	Composite APC
99205, 99215, G0379	G0378	8002

Separate Direct Admit (G0379) Processing Logic

(See appendix H-b for flowchart):

a) Code G0378 must be present on the same day

b) No SI = T, E/M, or C/C visit on the same day

c) Code G0379 may be paid under the composite 8002, paid under APC 604, or packaged with SI = N.

Appendix L
OCE overview

1. If claim from/through dates span more than one day, subdivide the line items on the claim into separate days based on the calendar day of the line item service date.

For claims with OPPS flag = "1":

2. Assign the default values to each line item in the APC/ASC return buffer.
   The default values for the APC return buffer for variables not transferred from input, or not pre-assigned, are as follows:

Payment APC/ASC	00000
HCPCS APC	00000
Status indicator	W
Payment indicator	3
Discounting formula number	1
Line item denial or rejection flag	0
Packaging flag	0
Payment adjustment flag	0
Payment method flag	Assigned in steps 8, 20 and 21

3. If no HCPCS code is on a line item and the revenue code is from one of four specific lists, then assign the following values to the line item in the APC return buffer.

	N-list	E-list	B-list	F-list
HCPCS APC	00000	00000	00000	00000
Payment APC:	00000	00000	00000	00000
Status Indicator:	N	E	B	F
Payment Indicator	9	3	3	4
Packaging flag:	1	0	0	0

If there is no HCPCS code on a line, and the revenue center is not on any of the specified lists, assign default values as follows:

HCPCS APC	00000
Payment APC:	00000
Status Indicator:	**Z**
Payment Indicator	3
Packaging flag:	0

If the HCPCS code is invalid, or the revenue code is invalid and the HCPCS is blank, assign default values as follows:

HCPCS APC	00000
Payment APC:	00000
Status Indicator:	**W**
Payment Indicator	3
Packaging flag:	0

4. If applicable based on Appendix F, assign HCPCS APC in the APC/ASC return buffer for each line item that contains an applicable HCPCS code.

5. If procedure with status indicator "C" and modifier CA is present on a claim and patient status = 20, assign payment APC 375 to "C" procedure line and set the discounting factor to 1. Change SI to "N" and set the packaging flag to 1 for all other line items occurring on the same day as the line item with status indicator "C" and modifier CA. If multiple lines, or one line with multiple units, have SI = C and modifier CA, generate edit 60 for all lines with SI = C and modifier CA.

Appendix L
OCE Overview (cont'd)

6. If edit 18 is present on a claim, generate edit 49 for all other line items occurring on the same day as the line item with edit 18, and set the line item denial or rejection flag to 1 for each of them. Go to step 17.

7. If all of the lines on the claim are incidental, and all of the line item action flags are zero, generate edit 27. Go to step 17.

8. If the line item action flag for a line item has a value of 2 or 3 then reset the values of the Payment APC and HCPCS APC to 00000, and set the payment method flag to 4. If the line item action flag for a line item has a value of 4, set the payment method flag to 0. Ignore line items with a line item action flag of 2, 3 or 4 in all subsequent steps.

9. If bill type is 13x and condition code = 41, or type of bill = 76x, apply partial hospitalization logic from Appendix C. Go to step 11.

10. If bill type is 12x, 13x or 14x without condition code 41 apply mental health logic from Appendix

11. Apply general composite logic from appendix K (APCs 8000, 8001)

12. If bill type is 13x, apply Extended Assessment and Management composite logic from appendix H-c and Direct Admission for Observation logic from Appendix H-b.

13. If code is on the "sometimes therapy" list, reassign the status indicator to A, APC 0 when there is a therapy revenue code or a therapy modifier on the line.

14. Apply special packaging logic (T-packaged followed by STVX-packaged).

15. If the payment APC for a line item has not been assigned a value in step 9 thru 14, set payment APC in the APC return buffer for the line item equal to the HCPCS APC for the line item.

16. If edits 9, 13, 19, 20, 21, 28, 39, 40, 45, 47, 49, 53, 64, 65, 67, 68, 69, 76 are present in the edit return buffer for a line item, the line item denial or rejection flag for the line item is set to 1.

17. Compute the discounting formula number based on Appendix D for each line item that has a status indicator of "T", a modifier of 52, 73 or 50, or is a non type "T" bilateral procedure, or is a non-type "T" procedure with modifier 52 or 73. Note: If the SI or APC of a code is changed during claims processing, the newly assigned SI or APC is used in computing the discount formula. Line items that meet any of the following conditions are not included in the discounting logic.

    Line item action flag is 2, 3, or 4
    Line item rejection disposition or line item denial disposition in the APC/ASC return buffer is 1 and the line item action flag is not 1
    Packaging flag is not 0 or 3

18. If the packaging flag has not been assigned a value of 1 or 2 in previous steps and the status indicator is "N", then set the packaging flag for the line item to 1.

19. If the submitted charges for HCPCS surgical procedures (SI = T, or SI = S in code range 10000-69999) is less than $1.01 for any line with a packaging flag of 0, then reset the packaging flag for that line to 3 when there are other surgical procedures on the claim with charges greater than $1.00.

Appendix L
OCE Overview (cont'd)

20. For all bill types where APCs are assigned, apply drug administration APC consolidation logic from appendix I. (v6.0 – v7.3 only)

21. Set the payment adjustment flag for a line item based on the criteria in Appendix G and Appendix J.

22. Set the payment method flag for a line item based on the criteria in Appendix E(a). If any payment method flag is set to a value that is greater than zero, reset the HCPCS and Payment APC values for that line to '00000'.

23. If the line item denial or rejection flag is 1 or 2 and the payment method flag has been set to 2 in the previous step, reset the payment method flag to 3.

For claims with OPPS flag = “2”:

2. Set Non-OPPS bill type flag as applicable, based on the presence or absence of ASC procedures.

Appendix M

Summary of Modifications

The modifications of the OCE for the July 2008 release (V9.2) are summarized in the attached table.
Readers should also read through the specifications and note the highlighted sections, which also indicate change from the prior release of the software.

Some OCE modifications in the release may also be retroactively added to prior releases. If so, the retroactive date will appear in the 'Effective Date' column.

	Mod. Type	**Effective Date**	**Edit**	
1.	Logic	7/1/08	24	Modify the software to maintain/retain 28 prior quarters (7 years) of programs & codes in each release. Remove older versions with each release. (The earliest version date included in the July 2008 release will be 4/1/01).
2.	Logic	7/1/08	50	Change disposition for edit 50 to **RTP**.
3.	Logic	**4/1/01**		Ignore denied or rejected lines in PHP processing and Daily MH assignment criteria

1	Content			Make HCPCS/APC/SI changes as specified by CMS
2	Content		19, 20, 39, 40	Implement version **14.1** of the NCCI file, removing all code pairs which include Anesthesia (00100-01999), E&M (92002-92014, 99201-99499), or MH (90804-90911).
3	Content	**1/1/08**	17	Remove codes 92621 and 92627 from the Inherently bilateral list – change bilateral indicator to '0'.
4	Content	7/1/08	15	Change all max units to zero for all codes that currently have max unit values other than zero.
5	Content	**1/1/08**	78	Update nuclear medicine/radiopharmaceutical edit requirements
6	Content	**1/1/08**	71/77	Update procedure/device & device/procedure edit requirements
7	Content	7/1/08	22	Add new modifier CG ("Policy criteria applied") to the valid modifier list.
8	Doc			Documented some 'general programming notes' that were in effect but not previously documented
9	Doc			Documented the exclusion of denied or reject lines from composite criteria
10	Doc	**1/1/08**	68	Implement mid-quarter NCD activation date for specified G codes. (Apply to G0398, G0399, G0400 if DOS is before 3/13/08)
11	Doc			Create a 508 Compliant version of the document (modify as necessary) – for publication on CMS website

Appendix N

Code Lists Referenced in this Document

A. HCPCS Codes for Reporting Antigens, Vaccine Administration, Splints, and Casts

Category	Code
Antigens	95144, 95145, 95146, 95147, 95148, 95149, 95165, 95170, 95180, 95199
Vaccine Administration	90471, 90472, G0008, G0009
Splints	29105, 29125, 29126, 29130, 29131, 29505, 29515
Casts	29000, 29010, 29015, 29020, 29025, 29035, 29040, 29044, 29046, 29049, 29055, 29058, 29065, 29075, 29085, 29086, 29305, 29325, 29345, 29355, 29358, 29365, 29405, 29425, 29435, 29440, 29445, 29450, 29700, 29705, 29710, 29715, 29720, 29730, 29740, 29750, 29799

B. Partial Hospitalization Services

PHP List A	PHP List B
90818	90801
90819	90802
90821	90816
90822	90817
90826	90818
90827	90819
90828	90821
90829	90822
90845	90823
90846	90824
90847	90826
90849	90827
90853	90828
90857	90829
90865	90845
90880	90846
	90847
	90849
	90853
	90857
	90865
	90880
	90899
	96101
	96102
	96103
	96116
	96118
	96119
	96120
	G0129
	G0176
	G0177

Final/R2

Summary of Data Changes

Integrated OCE v 9.2

Effective July 1, 2008

Table of Contents

CPT codes, descriptions, and material only are Copyright 2007 American Medical Association. All Rights Reserved. No fee schedules, basic units, relative values, or related listings are included in CPT. The AMA assumes no liability for the data contained herein. Applicable FARS/DFARS restrictions apply to government use.

DEFINITIONS 3
APC CHANGES 4
Added APCs 4
APC Status Indicator Changes 4
HCPCS/CPT PROCEDURE CODE CHANGES 4
Added HCPCS/CPT Procedure Codes 4
HCPCS Description Changes 5
HCPCS Changes- APC, Status Indicator and/or Edit Assignments 5
Units of Service Changes 7
Edit Assignments 7
Radiopharmaceutical Changes 7
Procedure/ Device Pair Changes 8
Device/Procedure Pair Changes 8
MODIFIERS 8
Added Modifiers 8

DEFINITIONS

- A blank in a field indicates ‘no change’

- The “old” column describes the attribute prior to the change being made in the current update, which is indicated in the “new” column. If the effective date of the change is the same as the effective date of the new update, ‘old’ describes the attribute up to the last day of the previous quarter. If the effective date is retroactive, then ‘old’ describes the attribute for the same date in the previous release of the software.

- “Unassigned”, “Pre-defined” or “Placeholder” in APC or HCPCS descriptions indicates that the APC or HCPCS code is inactive. When the APC or HCPCS code is activated, it becomes valid for use in the OCE, and a new description appears in the “new description” column, with the appropriate effective date.

- Activation Date (ActivDate) indicates the mid-quarter date of FDA approval for a drug, or the mid-quarter date of a new or changed code resulting from a National Coverage Determination (NCD). The Activation Date is the date the code becomes valid for use in the OCE. If the Activation Date is blank, then the effective date takes precedence.

- Termination Date (TermDate) indicates the mid-quarter date when a code or change becomes inactive. A code is not valid for use in the OCE after its termination date.

- For codes with SI of “Q”, the APC assignment is the standard APC to which the code would be assigned if is paid separately.

APC CHANGES

Added APCs

The following APC(s) were added to the IOCE, **effective 07-01-08**

APC	APCDesc	StatusIndicator
09242	Injection, fosaprepitant	G
09356	TendoGlide Tendon Prot, cm2	G
09357	Flowable Wound Matrix, 1 cc	G
09358	SurgiMend, 0.5cm2	G

APC Status Indicator Changes

The following APC(s) had Status Indicator changes, **effective 07-01-08**

APC	Old SI	New SI
00946	K	G
01138	K	G

HCPCS/CPT PROCEDURE CODE CHANGES

Added HCPCS/CPT Procedure Codes

The following new HCPCS/CPT code(s) were added to the IOCE, **effective 01-01-08**

HCPCS	CodeDesc	SI	APC	Edit	ActivDate	TermDate
G0398	Home sleep test/type 2 Porta	S	00213		20080313	
G0399	Home sleep test/type 3 Porta	S	00213		20080313	
G0400	Home sleep test/type 4 Porta	S	00213		20080313	

The following new HCPCS/CPT code(s) were added to the IOCE, **effective 04-01-08**

HCPCS	CodeDesc	SI	APC	Edit	ActivDate	TermDate
Q4099	Formoterol fumarate, inh	M	00000	72		

The following new HCPCS/CPT code(s) were added to the IOCE, **effective 07-01-08**

HCPCS	CodeDesc	SI	APC	Edit	ActivDate	TermDate
0188T	Videoconf crit care 74 min	M	00000	72		
0189T	Videoconf crit care addl 30	M	00000	72		
0190T	Place intraoc radiation src	T	00237			
0191T	Insert ant segment drain int	T	00234			
0192T	Insert ant segment drain ext	T	00234			
3351F	Neg scrn dep symp by deptool	E	00000	9		

HCPCS	CodeDesc	SI	APC	Edit	ActivDate	TermDate
3352F	No sig dep symp by dep tool	E	00000	9		
3353F	Mild-mod dep symp by deptool	E	00000	9		
3354F	Clin sig dep sym by dep tool	E	00000	9		
C9242	Injection, fosaprepitant	G	09242	55		
C9356	TendoGlide Tendon Prot, cm2	G	09356	55		
C9357	Flowable Wound Matrix, 1 cc	G	09357	55		
C9358	SurgiMend, 0.5cm2	G	09358	55		
G8485	Report Diabetes measures	M	00000	72		
G8486	Report prev care measures	M	00000	72		
G8487	Report CKD measures	M	00000	72		
G8488	Report ESRD measures	M	00000	72		

HCPCS Description Changes

The following code descriptions were changed, **effective 01-01-08**

HCPCS	Old Description	New Description
G0249	Provide test material,equipm	Provide INR test mater/equip

The following code descriptions were changed, **effective 07-01-08**

HCPCS	Old Description	New Description
G0250	MD review interpret of test	MD INR test revie inter mgmt

HCPCS Changes- APC, Status Indicator and/or Edit Assignments

The following code(s) had an APC and/or SI and/or edit change, **effective 01-01-06** **A blank in the field indicates no change.

HCPCS	CodeDesc	Old APC	New APC	Old SI	New SI	Old Edit	New Edit
90736	Zoster vacc, sc			E	M	28	72

The following code(s) had an APC and/or SI and/or edit change, **effective 04-01-06** **A blank in the field indicates no change.

HCPCS	CodeDesc	Old APC	New APC	Old SI	New SI	Old Edit	New Edit
90736	Zoster vacc, sc			B	M	62	72

The following code(s) had an APC and/or SI and/or edit change, **effective 07-01-07** **A blank in the field indicates no change.

HCPCS	CodeDesc	Old APC	New APC	Old SI	New SI	Old Edit	New Edit
J7607	Levalbuterol comp con			B	M	62	72
J7608	Acetylcysteine inh sol u d			B	M	62	72
J7609	Albuterol comp unit			B	M	62	72
J7610	Albuterol comp con			B	M	62	72
J7615	Levalbuterol comp unit			B	M	62	72
J7620	Albuterol ipratrop non-comp			B	M	62	72
J7622	Beclomethasone comp unit			B	M	62	72
J7624	Betamethasone comp unit			B	M	62	72

HCPCS	CodeDesc	Old APC	New APC	Old SI	New SI	Old Edit	New Edit
J7626	Budesonide non-comp unit			B	M	62	72
J7627	Budesonide comp unit			B	M	62	72
J7628	Bitolterol mesylate comp con			B	M	62	72
J7629	Bitolterol mesylate comp unt			B	M	62	72
J7631	Cromolyn sodium inh sol u d			B	M	62	72
J7633	Budesonide non-comp con			B	M	62	72
J7634	Budesonide comp con			B	M	62	72
J7635	Atropine comp con			B	M	62	72
J7636	Atropine comp unit			B	M	62	72
J7637	Dexamethasone comp con			B	M	62	72
J7638	Dexamethasone comp unit			B	M	62	72
J7639	Dornase alpha inhal sol u d			B	M	62	72
J7641	Flunisolide comp unit			B	M	62	72
J7642	Glycopyrrolate comp con			B	M	62	72
J7643	Glycopyrrolate comp unit			B	M	62	72
J7644	Ipratropium bromide non-comp			B	M	62	72
J7645	Ipratropium bromide comp			B	M	62	72
J7647	Isoetharine comp con			B	M	62	72
J7648	Isoetharine non-comp con			B	M	62	72
J7649	Isoetharine non-comp unit			B	M	62	72
J7650	Isoetharine comp unit			B	M	62	72
J7657	Isoproterenol comp con			B	M	62	72
J7658	Isoproterenol non-comp con			B	M	62	72
J7659	Isoproterenol non-comp unit			B	M	62	72
J7660	Isoproterenol comp unit			B	M	62	72
J7667	Metaproterenol comp con			B	M	62	72
J7668	Metaproterenol non-comp con			B	M	62	72
J7669	Metaproterenol non-comp unit			B	M	62	72
J7670	Metaproterenol comp unit			B	M	62	72
J7680	Terbutaline sulf comp con			B	M	62	72
J7681	Terbutaline sulf comp unit			B	M	62	72
J7682	Tobramycin non-comp unit			B	M	62	72
J7683	Triamcinolone comp con			B	M	62	72
J7684	Triamcinolone comp unit			B	M	62	72
J7685	Tobramycin comp unit			B	M	62	72
J7699	Inhalation solution for DME			Y	M	61	72

The following code(s) had an APC and/or SI and/or edit change, **effective 01-01-08** **A blank in the field indicates no change.

HCPCS	CodeDesc	Old APC	New APC	Old SI	New SI	Old Edit	New Edit
A4565	Slings			A	N		

The following code(s) had an APC and/or SI and/or edit change, **effective 07-01-08** **A blank in the field indicates no change.

HCPCS	CodeDesc	Old APC	New APC	Old SI	New SI	Old Edit	New Edit
J1571	HepaGam B IM injection			K	G		
J1573	Hepagam B intravenous, inj			K	G		

Units of Service Changes

The following code(s) were assigned to the following "units of service", **effective 07-01-08**

HCPCS	Old Max Units	New Max Units
36430	1	0
C2616	1	0
G0249	3	0
G0339	1	0
G0340	1	0
G0379	2	0
G0390	1	0
G3001	1	0

Edit Assignments

The following code(s) were added to edit 67, 68, or 69 **effective 01-01-08**

HCPCS	Edit#	ActivDate	TermDate
G0398	68	20080313	0
G0399	68	20080313	0
G0400	68	20080313	0

The following code(s) were removed from the inherently bilateral list, **effective 01-01-08**

HCPCS
92621
92627

Radiopharmaceutical Changes

The following code(s) were added to the radiopharmaceutical list, **effective 01-01-08**

HCPCS
A9527
A9530
A9543
A9545
A9563
A9564
A9600
A9605
C1716
C1717
C1719
C2616
C2634
C2635

HCPCS
C2636
C2638
C2639
C2640
C2641
C2642
C2643
C2698
C2699

Procedure/ Device Pair Changes

The following procedure/device code pair requirements were added, **effective 07-01-08**

Proc	Device1
19298	C1728
43647	C1897

Device/Procedure Pair Changes

The following device/procedure code pair requirements were added, **effective 07-01-08**

Device	Proc
C1897	43647

MODIFIERS

Added Modifiers

The following modifier(s) were added to the list of valid modifiers, **effective 07-01-08**

modif	ACTIVATIONDATE
CG	0